ADRAD RADIATORS

PERFORMANCE COOLING

2013 PRODUCT CATALOGUE

www.adradradiators.com.au

Adrad Performance Cooling Product Catalogue 2013

All measurements are in millimetres unless otherwise stated.

Every effort has been made by Adrad to ensure the information contained within this catalogue is accurate. However, because of the possibility of human or other error, Adrad does not guarantee the accuracy, suitability or completeness of any information contained herein.

This catalogue is supplied as a reference guide and users should independently ascertain the suitability of each product for a particular application. The use of manufacturers' or others' names and numbers are for reference purposes only and does not imply that the product offered for sale is of the same quality. Adrad assumes no responsibility for errors or omissions and is not liable for loss or damages resulting from the use of information in this catalogue. Images supplied within are a guide for the product offered and the product may change at any time without notice. Although every care is given that all products on offer are in stock, it is unfortunate that some may be out of stock from time to time in which Adrad holds no liability. Depending on demand, products may need to be freighted (at customer's expense) to various locations or ordered in.

NOTE: Many alloy radiators to suit older model vehicles are designed as bolt-in replacements. The mounting points, connections and cooling capacity will have been modelled on the original engine requirements. Modified and high-powered engines can often generate much more heat load than the original engine so care must be taken to provide sufficient cooling in these applications.

Specially configured radiators are available for high-powered vehicles and those used in motorsport applications. Please contact us to discuss you individual requirements.

Details of any corrections or suggestions for further catalogues are most welcome and should be directed to Adrad Pty Ltd.

Our Mission

To have satisfied customers served by happy, competent employees working for a progressive company.

Contents

Superior Core Design

Attention to detail prolongs core life!

A folded hem on ADRAD's alloy fins stiffen the face of the core.

Standard on most alloy cores the double material thickness significantly reduces fin damage and allows the core to be worked in a variety of ways!

- Resists Race damage
- Maintains Core Performance and appearance
- Withstands pressure washing

Proven Performance

ADRAD radiators and oil coolers are chosen by race teams to protect their engines and transmissions during punishing race conditions. Professional race teams in V8 Supercars, V8 SuperTourers, Dakar Rally Racers, Off-Road Racers and World Series Sprintcars all rely on ADRAD cooling to help them achieve maximum performance.

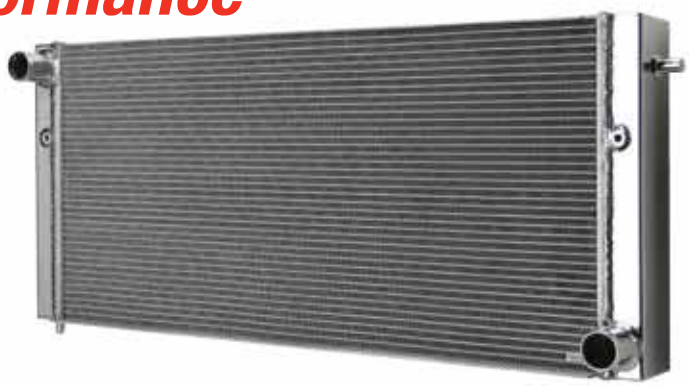

Cooling the Cars of the Future

New for 2013, the Australian V8 Supercars "car of the future" design utilises ADRAD high performance cooling components to control temperatures in these 600+ horsepower race machines and help them cope with the extreme temperatures generated during racing.

Performance for Rallying

EXTREME 4X4 RACING

Bruce Garland and Harry Suzuki are seasoned veterans when it comes to off road racing. Over some 20 years of racing they have achieved outright class wins and podium finishes at events across Australia and around the world including the awesome Dakar Rally. Back in 2009, they claimed 1st diesel pickup and placed an impressive 11th outright at Dakar. The ambient temperatures of desert racing can reach 50°C so high performance cooling is critical!

The team's latest vehicle is a 2012 Isuzu D-Max 4x4 diesel ute with an Australian made, custom built Adrad performance alloy radiator mounted behind the cabin to protect against impact damage.

Bruce has won the Australasian Safari 3 times, achieved podium finishes twice at the Finke Desert Race and has entered the Dakar 4 times.

Bruce chooses ADRAD radiators to help his vehicle succeed in the extreme conditions of world class desert racing.

In the 2013 Dakar, Geoff Olholm's Adrad-cooled Toyota Hilux #337 finished 3rd in class and 11th outright, while Adrian DiLallo's Adrad-cooled D-Max #439 (raced by Bruce Garland last year) finished 11th in class and 38th outright.

QUAD SAFARI WINNER

The 2011 Australasian Safari was held in September 2011 in the WA outback. Winner of the Quad division was John Maragozidis on his ADRAD-cooled MMR Interceptor 850. Seven days of racing over incredibly challenging terrain and distances is an extreme test of a rider's mental and physical stamina. It also delivers a punishing workout for the race machines. In John's words "We love the abuse!"

Performance for V8 Supercar Teams

ADRAD radiators and oil coolers are used by winning V8 Supercar teams at Australia's most famous motorsport event, "The Great Race", Bathurst 1000. This punishing 1,000km (620 mile) endurance race involves top speeds around 300km/h (190mph) and takes around 6 hours to complete.

2011 winners, the Toll HRT race cars run ADRAD radiators and oil coolers to help them achieve maximum engine performance and to endure the extreme conditions of Bathurst. Mike Henry (Operations Manager Toll HRT) said that "Cooling was exceptional during the whole event".

On average, ADRAD-cooled V8 Supercars cars achieved 2 out of 3 podium positions for the entire season.

We have every confidence that the 2013 Bathurst race will be won by an ADRAD-cooled V8 Supercar.

Refer to page 17 in the Product section of this catalogue to find the high performance radiator for your car.

Cooling for 4x4's

It's true that many 4x4's will be driven mostly on tarmac with occasional use on unsealed roads, beach sand or snow. The standard cooling system is designed to manage this.

Frequent off-road drivers and adventure enthusiasts will demand more and will often modify their vehicles to improve power and ride performance (as well as bolting on an array of accessories). They understand that upgrades are necessary to help the vehicle cope comfortably and reliably in rugged terrain. Engine modifications that deliver extra power will place increased load on the cooling system, so ADRAD offers a range of radiator and intercooler products that cater for mild through to extreme engine upgrades.

Other 4x4 owners simply want to exploit their vehicle's towing capabilities. Again, this will impact on the standard cooling system and especially on the transmission cooler. ADRAD has heavy duty oil coolers designed to better control temperature in hard-working transmissions.

ADRAD 4x4 cooling products are proven performers in Australia's harsh environment.

Performance in Speedway

World Series Sprintcars are high powered race cars designed primarily for running on short oval or circular dirt tracks. They can accelerate to 100kph in under 3 seconds and on some of the straights will reach track speeds of 230kph – on dirt!

This astonishing engine power requires serious cooling to keep the temperature under control.

However, it's not only the extreme temperature demands of racing that the radiator has to manage. There is severe vibration, chassis flex and 200kph lumps of clay being hurled at the radiator to contend with. With such a punishing operating environment, sprintcar radiators need to combine superior cooling performance with superior strength and durability.

ADRAD have been manufacturing and supplying Sprintcar radiators for over 16 years and know just how demanding these machines can be on cooling systems. Many of the same design features for these race radiators are included in ADRAD's performance alloy radiators for street cars.

This is because ADRAD takes performance cooling very seriously.

Knowledge gained from racing experience is constantly fed back to ADRAD's design and manufacturing teams to help them build the high quality performance radiators that Australian racers and car enthusiasts need to stay cool. It's another reason why you should always "Ask for ADRAD".

Alloy Intercooler & Oil Profiles

Offering two engineered extrusion profiles, ADRAD's unique designs allow the manufacture of high quality, high performance air to air

Intercoolers, air to water Intercoolers and oil coolers.

Two of the components featured are fitted into the intake manifold of Harrop Engineering's GEN III intercooled supercharger kit.

A remote radiator cools water that runs through the profiled tubes to chill the supercharged air as it passes through the fins. This specially manufactured intercooler core is "stepped" in construction to provide optimum airflow and follow the contour of the intake manifold.

Stepped Water Radiator Cores

Stepped cores are designed for motorsport applications where radiators are required to be inclined.

By using a stepped core raked at an angle (up to 30 degrees) a clear passage of air still flows through the radiator.

Compared to inclining a standard core, where the air flow tends to deflect off the face causing an air side pressure drop and reducing efficiency. (Pictured below)

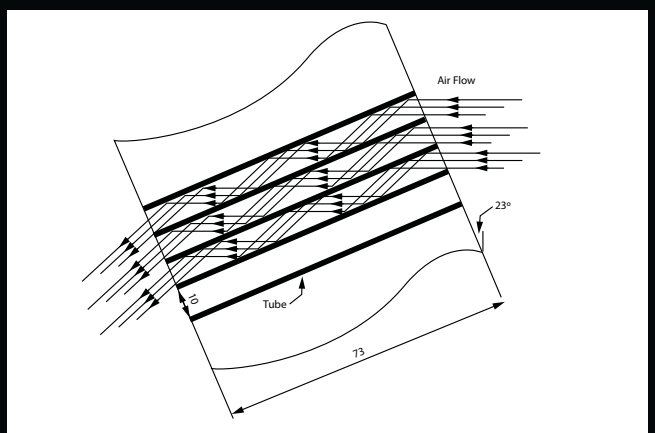

Radiator with 73mm core thickness Tube pitch 10mm

Proven products that are tried and tested

ADRAD is Australia's longest established manufacturer of Alloy Cooling Cores having begun manufacturing in Queensland in 1996. ADRAD is able to manufacture aluminium radiator, intercooler and oil cooler cores to suit a wide variety of applications. The high performance aluminium products ADRAD manufactures have been tried and tested in the market place in some of the toughest conditions possible, everything from street use, drag cars, V8 Supercars, Rally, Speedway, right through to snowmobiles in the USA and Canada.

ADRAD offers an exclusive hemmed fin and a unique fin louvre design. These two components combined allow us to produce a product which is both strong and durable and offers superior performance. ADRAD specialises in custom made, and made to order (NPN) alloy cores and radiator assemblies. If you cannot find a listing for the complete radiator or core that you are looking for, all you need to do is to provide us with a hand drawing and we can spec up a unit to suit. Through our experienced design and fabrication team, we are able to build an alloy radiator, intercooler or oil cooler core to suit your exact requirement. With a variety of tube sizes, configurations and Fin density as listed on page 3 rarely would there be a core not suitable for your specific application. Manufacturing lead time starts from 2-3 days for alloy cores whilst complete alloy units would normally take approx. 7 working days from the order confirmation to despatch. All of our alloy cooling cores and assemblies are pressure tested and guaranteed leak free with warranties up to two years.

From the Beach to the Snow

ADRAD performance cooling products are used around the world. A North American tuner of high performance snowmobiles achieves power gains by fitting turbo intercoolers made using Australian ADRAD cores manufactured at Currumbin in Queensland's Gold Coast. Despite being over 12,000km away, this customer chooses to use quality ADRAD performance cooling products.

ADRAD Manufactured Aluminium Tube Specification

					 NEW
Core * Config.	WATER COOLING	WATER COOLING	WATER COOLING	WATER COOLING	EXTRUDED
Tube Size	16mm	26mm	26mm	38mm	54.5mm
1 Row	17.5mm	27.5mm	-	40mm	54.5mm
2 Rows	36mm	56mm	54.5mm	-	-
3 Rows	54.5mm	-	-	-	-
4 Rows	73mm	-	-	-	-
FPI Range	13 - 18 / 14, 16, 18	13 - 18	14, 16, 18	13 - 18 / 14, 16, 18	13 - 18 / 14, 16, 18
Fin Height	8mm / 6mm (SL)	9mm	6mm (SL)	8mm / 6mm (SL)	8mm / 6mm (SL)
Tube Height	2mm	2mm	2mm	2mm	2mm
Pitch	10mm / 8mm	11mm	8mm	10mm / 8mm	10mm / 8mm
Tube Type	Smooth / Dimpled	Smooth / Dimpled	Smooth / Dimpled	Smooth	Smooth

					
Core * Config.	CHARGE AIR COOLING	CHARGE AIR COOLING	CHARGE AIR COOLING	OIL COOLING	OIL COOLING
Tube Size	36mm	54.5mm	73mm	36mm	54.5mm
1 Row	36mm	54.5mm	73mm	36mm	54.5mm
2 Rows	73mm	109mm	147mm	73mm	110mm
3 Rows	108mm	-	-	-	-
FPI Range	13 - 18	13 - 18	13 - 18	13 - 18	13 - 18
Fin Height	8mm	8mm	8mm	8mm	8mm
Tube Height	8mm	8mm	8mm	4.5mm	4.5mm
Pitch	16mm	16mm	16mm	12.5mm	12.5mm

CAC and Oil Cores are available in combination variants. ie. 54.5 + 36mm CAC tube = 91.5mm core thickness ie. 54.5 + 73 mm CAC tube - 128.5mm core thickness
* Custom configurations available. Some size restrictions and limitations apply. Please contact your local branch for details.

Koyo History

KOYORAD

Koyo are a world class Japanese radiator manufacturing company that specialises in cooling system components of the highest quality.

Koyo's unique strength is made possible by its total production system, which covers design and production of all types of radiator products.

Koyo's philosophy is "Contributing technology to create a higher standard". Koyo is leading the world in the automotive radiator aftermarket, a key component in the automotive industry.

Koyo, in its quest to be a global market leader through its heat exchange technologies, has a special emphasis on quality product that offers value for money whilst continually developing state of the art technology.

Koyo's head office is located in Japan, with an additional manufacturing facility in Indonesia housing 9,000m^2 of space, producing 3,500 radiators per day which are exported to all corners of the globe.

Koyo radiators are also available in plastic tank with aluminum core. Koyo's Nocolok® brazing line keeps the highest quality standards, bringing you superior products you can rely on.

Koyo's Lightweight high performance radiators provide the key to maximum engine performance. Koyo's experience in developing superior performance radiator products is evident in their K-Sport performance radiator range. Their off the shelf radiators allow your car to perform to its maximum potential.

Performance car enthusiasts strive to realise the full potential of a car's engine and handling.

Each alteration reflects the owner's individual desires & preferences, ultimately creating a unique and progressively tuned-up work of art.

Nothing is left to chance, nor are compromises made when it comes to building the best. Only one thing determines the ability of your engine in the red zone - An off the shelf K-Sport radiator that allows your engine to perform at its fullest potential!

KOYO K-Sport features:

- Specifically designed for high revving / high performance motors.
- Provide 20-30% more cooling than standard radiators.
- Ideal for turbo, supercharged engines & Nitrous Oxide. (NOS)
- Made from a ircraft quality aluminium and Heli-arc welded.
- Cores are NOCOLOK® - brazed and use no epoxy.
- All radiators are fully polished to a mirror finish.
- Superior packaging to ensure safe shipment, fresh from the factory.

KOYO Mirror Finish
All Aluminium surfaces are buffed before boxing to a mirror finish

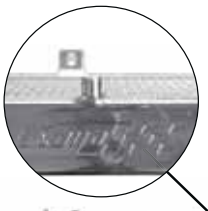

O.E. Specification Mounting
Fan mounts are situated to O.E. specification; allowing both stock and performance fans to be used.

53mm 2-Row Aluminium Core
Two different core depths to cover all engine tuning levels

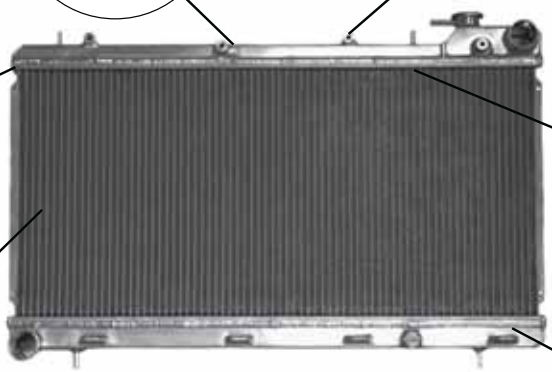

Nocolok® Brazing
Tubes, Fins, Headers and Brackets are brazed in a state-of-the-art Nocolok® Furnace, bonding all components solidly together.

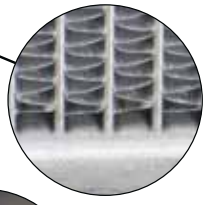

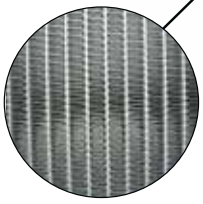

Tube and Fin Alignment
Construction under strict quality control and solid boxing result in pristine tube and fin alignment.

Hand-Crafted Heliarc Soldering
Heliarc Soldering is the highest in industry standard for reinforcement along aluminium connections.

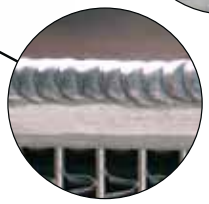

NOCOLOK is a registered trademark of Solvay Fluor Gmbh

Oil Cooler Tube

For Air to Fluid applications

ADRAD's tough extruded tube construction under test

ADRAD exclusive extruded oil cooler tube design is constructed in the same manner as the proven tough CAC tube currently in use.

Extrusion technology, coupled with controlled atmosphere brazed headers, provide a structure that can handle pressures far higher than normally required.

ADRAD are able to offer warranty on cores for use up to 60psi. For pressures above that threshold, other factors such as tank design and header plate overhang can be the root cause of potential failures. And as such, require experienced consumers to warrant their complete heat exchanger.

In-house positive oil static pressure testing showed the core structure was able to withstand 500psi. In fact, the test had to be suspended at 550psi, when header / tank distortion fractured the tank weld.

This profile has been specifically designed for oil-coolers and water to air intercoolers. The ratio of wall thickness vs. surface area vs. fluid volume provide exceptional performance for these applications.

Refer to page 5 for further tube specifications.

Close up of ADRAD's oil and air/water extrusion (available in 36mm & 54.5mm)

Water to Air Intercooling

This method of intercooling is not quite as popular as the air to air method, primarily due to the higher initial costs.

A separate dedicated water circuit is required, comprising of a heat-exchanger, electric water pump, and a small radiator.

Water passes through the heat exchanger, picking up heat from the compressed charge air. The heated water is then pumped through a front mounted radiator, where it is cooled and returned to the heat exchanger.

The specific heat capacity of a given volume of water is approximately 4 times that of the equivalent volume of air. Thus, the heat exchangers tend to be smaller than their air/ air counterparts. This enables air/water heat exchangers to be mounted directly above the intake manifold, or in some cases even in the manifolds.

Smaller pipes are required to transfer the water to the radiator, which can be advantageous in congested engine bays.

Performance wise, the air/water intercooler can out-perform air/air intercoolers. Particularly under street conditions, where short periods of time on boost are followed by time off boost. Knowledge and experience may be required to set up an effective system with correctly sized components.

Advantages of Water to Air Intercooling

- Short induction path
- Excellent for short power bursts (street use)
- Smaller and easier to package
- Less prone to damage

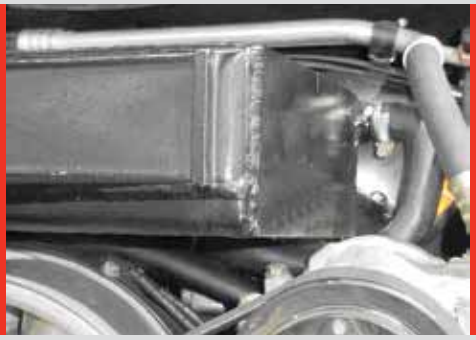

Typical top-mounted air/water intercooler

Electric Fans

ELECTRIC FANS – DAVIES CRAIG

The introduction of front wheel drive and down sizing of vehicles, has led to the rapid growth of electric fans for engine cooling. An efficient and economical method of automotive cooling, electric fans are also the fastest growing segment within "Cooling System Products".

With multiple uses for primary and supplemental add-on cooling, electric fans are quickly becoming one of the most important cooling components on today's vehicles.

As a primary cooling source electric fans provide:

- Economical replacement for failed O.E. parts
- 5-10% increase in engine power and fuel saving when replacing fan clutch and fan assemblies
- Reversible blades for pusher (upstream) or puller (downstream) applications
- Compatibility with all electric fan controls
- Coverage for a wide variety of applications

Electric fans are an excellent solution for vehicles requiring additional air flow. As an add-on cooling source electric fans reduce the workload on the primary cooling fan. Additional air flow increases the operating efficiencies on applications from small to recreational vehicles.

As an add-on cooling source electric fans provide:

- Constant air flow regardless of vehicle speed
- Increased air conditioning performance due to constant air flow across the condenser
- With the conversion from R12 to R-134A refrigerant there is a need for additional condenser cooling to ensure the overall improved efficiency of the cooling system
- Increased fuel economy

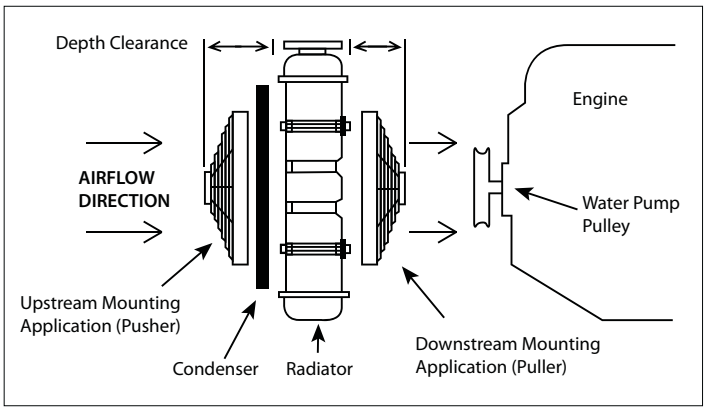

All of our electric fans kits are packaged complete with instructions and mounting hardware for quick and easy installation.

Refer to page 76 of Product section for detailed information

ELECTRIC FANS – MARADYNE

Maradyne electric fans are built with the highest quality of components. Their heavy duty electric motors are designed for longer life and are fully sealed for water and dust resistance, ensuring durability under harsh conditions. All plastic components are moulded out of 100% glass-filled nylon for premium strength (unlike common polypropylene blends of plastic fans).

Maradyne's range features a clever reversible skew blade which can be used as a 'pusher' or 'puller' so you only need to stock one fan instead of two. ADAIR offers Maradyne fans in both 12 and 24 volt configurations ranging from 9 inch through to 16 inch with air flow up to 2170 CFM.

Maradyne High Performance fans are used around the world and feature in NASCAR race cars, hot rods, off-road vehicles, drag cars, mobile generator sets and even military vehicles.

Take advantage of Maradyne's high quality, high performance fans and enquire through your local ADAIR supplier today.

Refer to page 79 of Product section for detailed information

Electric Water Pumps

The World's First universal fit automotive electric water pump!

The EWP® is the most economical way to increase horsepower and save on fuel consumption while caring for your engine.

The standard EWP® 80 (80 litre per minute) for cars with engine capacity up to a 3.0ltr.

The revolutionary, Australian designed, EWP® pump is made from anti-corrosive, lightweight, glass filled nylon and is a performance accessory that improves engine cooling control and capacity while giving you more power and improved fuel economy - old mechanical belt driven, water pumps run directly off the motor and sap engine power, while EWP® is hard wired into your electrical system.

The EWP® is universal fit by mounting in the bottom or top radiator hose.

The kit comes with everything you need for easy installation including: easy to understand, Do-it-yourself instructions, multiple sized couplings to fit every hose size and electrical wiring.

pt no. 8025

- **Long Life**
- **Increased engine power**
- **Greater cooling capacity**
- **80 litres per minute**
- **Better fuel economy**

ELECTRIC WATER PUMP - DIGITAL CONTROLLER

pt no. 8010

Introducing an all new 'Digital' Electronic Controller for the electric water pump

This latest generation "Digital" controller allows you to electronically set the target temperature and it adjusts the rate flow, hunting for and then locking onto, the temperature set. The actual coolant temperature and other operational information is displayed at all times to keep you informed and in control.

To overcome the effects of 'Heat Soak' the controller automatically continues to run the pump after ignition OFF for a period of 2 minutes or until the engine temperature is 5°c below the target temperature whichever occurs first.

Electronically controls electric water pump

Cools engine after shut down

"Smart " diagnostic capability

ELECTRIC BOOSTER PUMP

Booster Water Pump with Performance!

pt no. 9001

The 12v Davies Craig Electric Booster Pump (EPB) with its high flow capacity and advanced design, makes it ideal for a range of applications.

cars	motorcycles
off-road	boats
4WDS	camping
caravans	irrigation
go-karts	motor sports

Quality Construction

The EBP motor has no brushes to ever wear out and the pump is magnetically driven by the motor, which means that no shaft sealing is required. There is only one moving part, the impeller and it is floating in the coolant. The pump chamber is hermetically sealed for trouble free operation.

Brushless motor

Magnetic drive - no shaft seal

Long life - Heavy duty

12 volt

Transmission Oil Coolers

Did You Know?

Heat is the major contributing factor in the premature failure of Automatic Transmissions.

Towing or stop start city driving increases the operating temperatures of modern transmissions and reduces the effective life of the transmission fluid.

The heat generated causes the transmission fluid to oxidize and decrease the lubrication properties.

Today's sophisticated transmissions are very expensive to repair.The special design features in ADRAD's TC oil cooler cores allow the overall size to remain compact for easier fitment, while still retaining a superior heat-rejection rate. This is why this particular design is being utilised by some of today's leading car manufacturers!

Refer to page 53 of Product section for detailed information

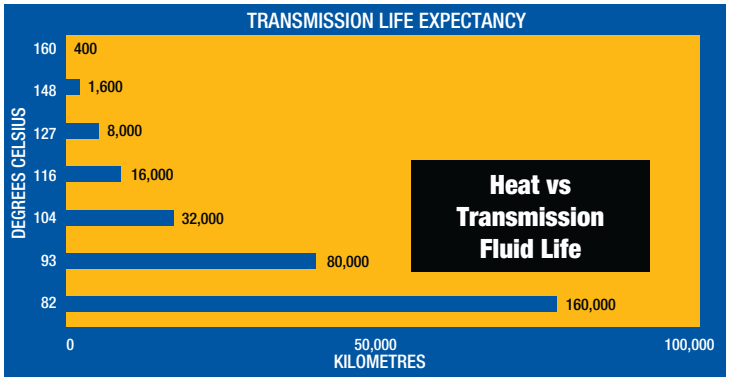

The plate and fin core design (below) features a dimpled, stacked plate construction that increases oil pressure drop, and louvered fins between the plates create maximum air flow through the core area. The top of each core also has a self- regulating low pressure drop feature, which allows a faster return of the oil until it has reached operating temperature, thereby reducing the pressure drop experienced by 'Serpentine' type coolers.

Install an External Transmission Oil Cooler Today!

This will keep your transmission running within the specified heat range and can dramatically extend the life of the Automatic Transmission. ADRAD have an extensive range of coolers to suit most applications, so you'll be sure to find what you need!

Do yourself a favour

Always recommend the fitment of a quality Transmission Oil Cooler. Don't hesitate to contact ADRAD now and demand the best value cooler on the market today!

Plate and fin core

SELF REGULATING COOLER CORE

1. To control the amount ATF (Auto Transmission Fluid bypassing the stacked plate core. The oil passes through a self-regulating orifice which monitors resistance to flow.
2. Controlled by viscosity, cooler, thicker ATF is returned directly to lube through two open bypass plates positioned above the stacked plate core.
3. As operating temperature increase, more ATF flow is directed through the core with its minimal flow resistance.
4. The result, a highly efficient oil cooler that protects against lube system failure and delivers optimal heat transfer as required.

Brazed aluminium, oil to air, transmission oil coolers have a burst pressure in excess of 400psi.

Each production core is tested at 200psi under water at the end of its production process.

Refer to page 53 of Product section for detailed information

FACT:

Cooler Core efficiency can be increased by approximately 25% at speed by the fabrication and installation of a forward facing cowling to capture and force feed air through the core.

Oil Coolers

THE SETRAB ADVANTAGE

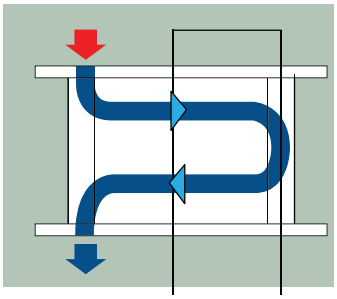

Multi-Pass Coolers

Multi-pass coolers demonstrate our ability to produce specialized coolers for specific needs. The multi-pass configuration in these high performance coolers ensure exposure of fluid to the maximum surface area of the cooler.

Internal Turbulators

Specialized in-line turbulators increase performance by gently directing the oil's flow path to expose it to the maximum internal surface area of the cooler. The in-line design of these turbulators offer superior performance with very low oil pressure restriction across the cooler.

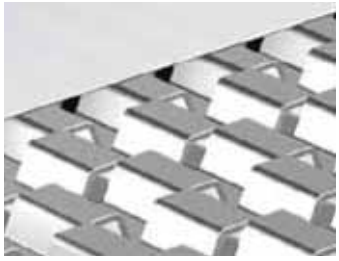

Bonding Process

SETRAB oil coolers are brazed as complete units in computerized furnaces. Each cooler is then tested to withstand appropriate pressures, vibrations and pulsation. Here quality has top priority and this highly specialized process results in unmatched durability and performance.

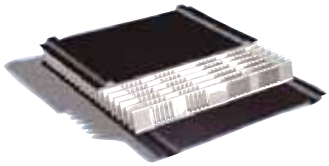

External Air Fins

Concentrated mini-louvered air fins deliver maximum heat transfer. Heat will dissipate more rapidly from sharp edges and the design of these fins guarantees superior performance potential.

Adaptor System Fittings

Setrab Pro-line Oil Coolers are manufactured with specialized low-profile female ports. These ports are converted to AN4, AN6, AN8, AN10, or AN12 fittings appropriate for each application with the use of Setrab adapters.

These adapters are produced of the same material used by hose fitting manufactures, assuring a clean, hard, external sealing surface.

A seated O'ring base provides a positive internal seal to the cooler. Each fitting is internally radius machined to ensure the best oil flow characteristics.

STD Standard Coolers

The Setrab STD oil cooler design is based on shallow aluminium dish plates brazed together to form tubes with internal in-line turbulators and external mini-louvered air fins. The STD is offered in the broadest range of sizes of anyother high performance oil cooler available.

This means there is a Setrab STD available for your most demanding application. STD coolers are designed for maximum working pressures to 150psi.

Lightweight, high performance, low pressure-drop, and durability have united in the STD to create the most demanded cooler by top teams and builders worldwide. The STD cooler is provided with specialized female ports to allow the use of high quality Setrab AN adaptoers in sizes appropriate to the application.

STACKED PLATE OIL COOLERS

Stacked-plate oil coolers or plate type oil-to-air coolers (POA) are compact, light weight, and especially economical for low flow rate applications. Higher flow rate is also allowed when the limit of oil pressure drop is not prohibited. POA is suitable for automotive application.

We offer two sizes: 32 mm core depth (d32) and 48 mm core depth (d48).

Refer to page 55 of Product section for detailed information

Installation Procedure

Thank you for selecting a quality ADRAD radiator for your vehicle. The radiator has been manufactured to high quality standards and with correct installation, care and maintenance of the vehicle's cooling system, the radiator will provide your vehicle with trouble-free engine cooling.

(PART A) INSTALLATION PROCEDURE FOR REPLACING THE RADIATOR STILL IN THE VEHICLE

1. Before removing the radiator, check the cooling system for stray current by:

   1.1 Carefully removing the radiator or expansion tank cap & bring the vehicle up to operating temperature.

   (WARNING: EXERCISE EXTREME CAUTION WHEN REMOVING THE RADIATOR OR EXPANSION TANK CAP.)

   1.2 Switch on all electrical items and ensure that the brake lights and hazard lights are functioning correctly.

   1.3 Use an analogue multimetre with a sensitivity of .05 volts or a stray current detector to check for the presence of electrical current by placing the negative lead on the battery negative post and the positive lead directly into the coolant. Be sure not to touch the side of the filler neck or core of the radiator with the positive probe. Switch on all the vehicle's electrical systems one at a time, e.g. spotlights, radios, CBs, air conditioner, etc. Do this process first with the engine running and then repeat the process with the engine off.

   1.4 A reading of more than .05 volts or a positive red light indicates damaging current is present in the cooling system.

   1.5 If voltage (stray current) is detected, isolate the circuit by turning all electrical items off and switching each circuit ON individually. This procedure by process of elimination assists in identifying the source of the current.

WARNING

THE SOURCE OF THE STRAY CURRENT MUST BE ELIMINATED BEFORE THE RADIATOR INSTALLATION CAN CONTINUE. FAILURE TO CORRECT A STRAY CURRENT FAULT WILL VOID THE MANUFACTURER'S WARRANTY AND LEAD TO PREMATURE FAILURE OF THE RADIATOR. CONSULT A QUALIFIED AUTO ELECTRICIAN FOR ASSISTANCE IF you are UNABLE TO LOCATE AND FIX THE CAUSE OF THE STRAY CURRENT.

2. On successful positive completion of the stray current test, completely drain the coolant from the system.
3. Thoroughly flush the cooling system, including the overflow reservoir and the heater system to remove all the old coolant, and any remaining residue or deposits. A power flush system is the most efficient method of removing all traces of the old coolant, loose particles or sediment.
4. Fill the system with water and treat using a quality alkaline cleaner, making sure that the vehicle's heater is turned on. Observe the instructions on the container. Run the vehicle to operating temperature.
5. Follow the vehicle manufacturer's recommendations for servicing of the cooling system, checking all components for wear.
6. Drain the water from the system and flush out with clean water. RINSE - RINSE - RINSE with clean water until you are convinced the system has been thoroughly flushed.
7. Remove the old radiator.
8. Install the new radiator assembly referring to the vehicle manufacturer's recommendations for any additional installation procedures.
9. Refill the system with clean water and check for stray current (refer to item 1).
10. Drain the water from the system.
11. Fill with the correct dosage of coolant/inhibitor, which complies with Australian Standard AS2108-97 (A) or the vehicle manufacturer's recommendation as a minimum standard. When mixing approved concentrated coolant/inhibitor, Distilled, Demineralised or Reverse Osmosis water must be used as recommended by the vehicle's manufacturer or the coolant/inhibitor's manufacturer. Ensure that the vehicle manufacturer's instructions for filling the cooling system are followed to ensure that air-locks are removed from the system and the vehicle has been run up to normal operating temperature, checking the coolant/inhibitor level and that all components are free from leaks.

NEVER MIX COOLANTS / INHIBITORS, AS THE RESULTING MIXTURE MAY HAVE AN ADVERSE CHEMICAL REACTION WITHIN THE COOLING SYSTEM, LEADING TO PREMATURE FAILURE OF THE RADIATOR & IT WILL VOID THE WARRANTY

(PART B) INSTALLATION PROCEDURE FOR REPLACING THE RADIATOR NOT IN THE VEHICLE

1. Install the new radiator assembly referring to the vehicle manufacturer's recommendations for any additional installation procedures.
2. Fill the system with water and treat using a quality alkaline cleaner making sure that the vehicle's heater is turned on. Observe the instructions on the container. Run the vehicle to operating temperature.
3. Throughly flush the cooling system, including the overflow reservoir & the heater system to remove all of the old coolant, and any remaining residue or deposits. A power flush system is the most efficient method of removing all traces of the old coolant, loose particles or sediment. RINSE - RINSE - RINSE with clean water until you are convinced the system has been throughly flushed.
4. Following the vehicle manufacturer's recommendations for servicing of the cooling system, checking all components for wear.
5. Refill the system with clean water and perform the stray current procedure test detailed in the first section of the installation procedure. If the stray current test is negative, proceed with installation.
6. Drain the water from the system.
7. Fill with the correct dosage of coolant/inhibitor, which complies with Australian Standard AS2108-97 (A) or the vehicle manufacturer's recommendation as a minimum standard. When mixing approved concentrated coolant/inhibitor, Distilled, Demineralised or Reverse Osmosis water must be used as recommended by the vehicle's manufacturer or the coolant/inhibitor's manufacturer. Ensure that the vehicle manufacturer's instructions for filling the cooling system are followed to ensure that air-locks are removed from the system and the vehicle has been run up to normal operating temperature, checking the coolant/inhibitor level and that all components are free from leaks.

IMPORTANT: ALWAYS CHECK FOR STRAY CURRENT POWER FLUSH AND CLEAN
NEVER MIX COOLANTS OR INHIBITANTS

Custom Order Form (NPN) - Core

Repairer's Name: _____ Date: _____

Contact Details: _____

Special Instructions: _____

_____

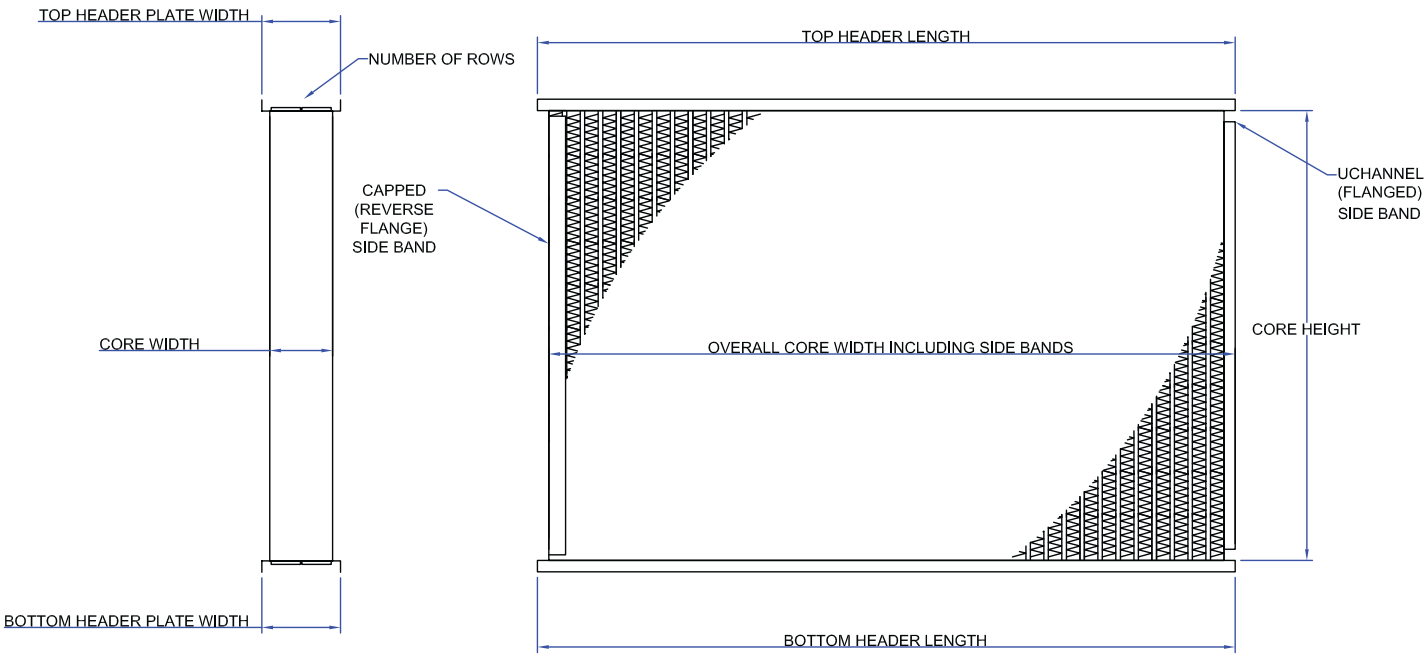

All Dimensions in MM

Core

Core Height _____

Core Width _____

Thickness _____

FPI _____

Core Type _____

Tube

Tube Size _____

Tube Pitch _____

# of Tube/Row _____

Fin Material

# of Rows _____

Header Size

Top Length _____

Bottom Length _____

Top Width _____

Bottom Width _____

Top Type _____

Bottom Type _____

Top Gauge _____

Bottom Gauge _____

Top Flange _____

Bottom Flange _____

Top Corners _____

Bottom Corners _____

Top Overhang _____

Bottom Overhang _____

Side Band Style

Flat

Channel

Reverse Channel

Flange Shapes of Header Types

Flanged

Tab

Flat (Heaters Only)

ALLOY NPN GENERAL ORDERING INFORMATION

- Core Height is always measured between the headers
- Flanged headers measured inside the turn up
- Please allow approx. 3 working days
- No returns on made-to-measure cores

BRANCH FAX NUMBERS

SA	08 8347 7245	WA	08 9370 4600
VIC	03 9790 4900	TAS	03 6334 3959
QLD	07 3272 7829	NSW	02 9729 2503
GOLD COAST	07 5598 1980	NEWCASTLE	02 4964 4238
TOWNSVILLE	07 4725 1152		

Custom Order Form (NPN) - Top Tank Assembly

Repairer's Name: _____ Date: _____

Contact Details: _____

Special Instructions: _____

_____

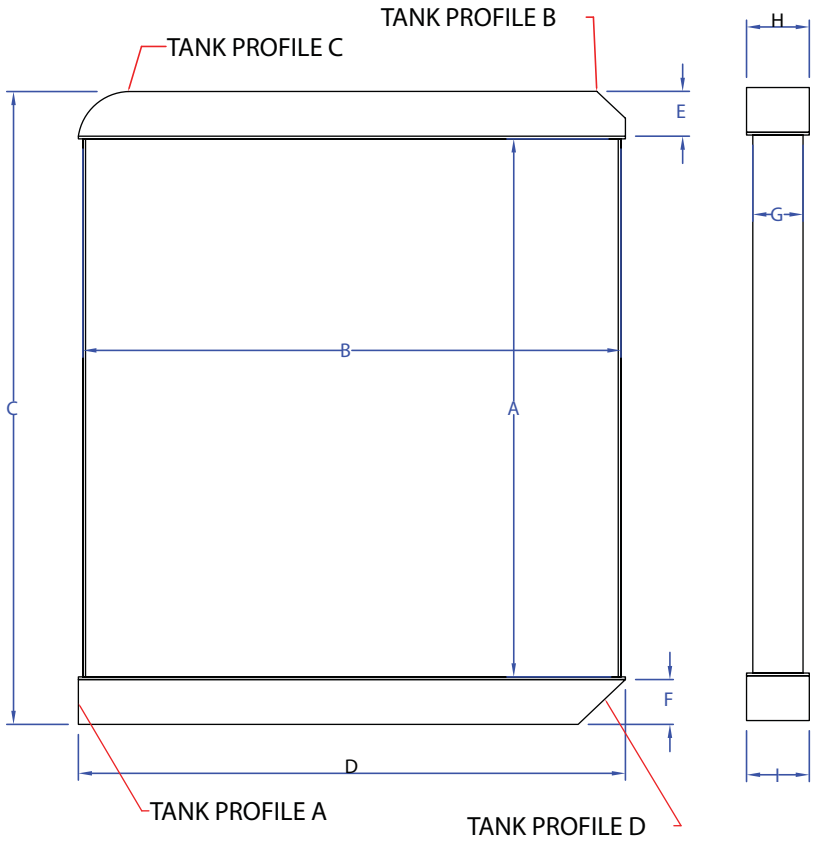

ADDITIONAL DRAWING SPACE

All Dimensions in MM

A. Core Height _____

B. Core Width _____

C. Overall Height _____

D. Overall Width _____

E. Top Tank Height _____

F. Bottom Tank Height _____

G. Core Thickness _____

H. Top Tank Width _____

I. Bottom Tank Width _____

Tank Profile _____

Fins Per Inch _____

Top Pipe Dia/Length _____

Bottom Pipe Dia/Length _____

Large Billet Filler Neck	Y / N
Small Billet Filler Neck	Y / N

Finish Required	**Y/N**
Unpolished Mill Finish	_____
Standard Polish	_____
High Polish	_____

Ground Back Welds	**Y/N**
Top Tank	_____
Bottom Tank	_____

Please draw in the position of the following components on the template drawing:

- Top and Bottom Inlet
- Mounting Pins (Diameter and Length Required)
- Threaded Bosses (Thread size Male/Female)
- If Inlet or Outlet Pipe to be angled please draw in space provided ensuring dimensions are provided

ALLOY NPN GENERAL ORDERING INFORMATION

- Core Height is always measured between the headers
- Flanged headers measured inside the turn up
- Please allow approx. 7 working days
- No returns on made-to-measure cores

BRANCH FAX NUMBERS

SA	08 8347 7245	WA	08 9370 4600
VIC	03 9790 4900	TAS	03 6334 3959
QLD	07 3272 7829	NSW	02 9729 2503
GOLD COAST	07 5598 1980	NEWCASTLE	02 4964 4238
TOWNSVILLE	07 4725 1152		

Custom Order Form (NPN) - Side Tank Assembly

Repairer's Name: _____ Date: _____

Contact Details: _____

Special Instructions: _____

_____

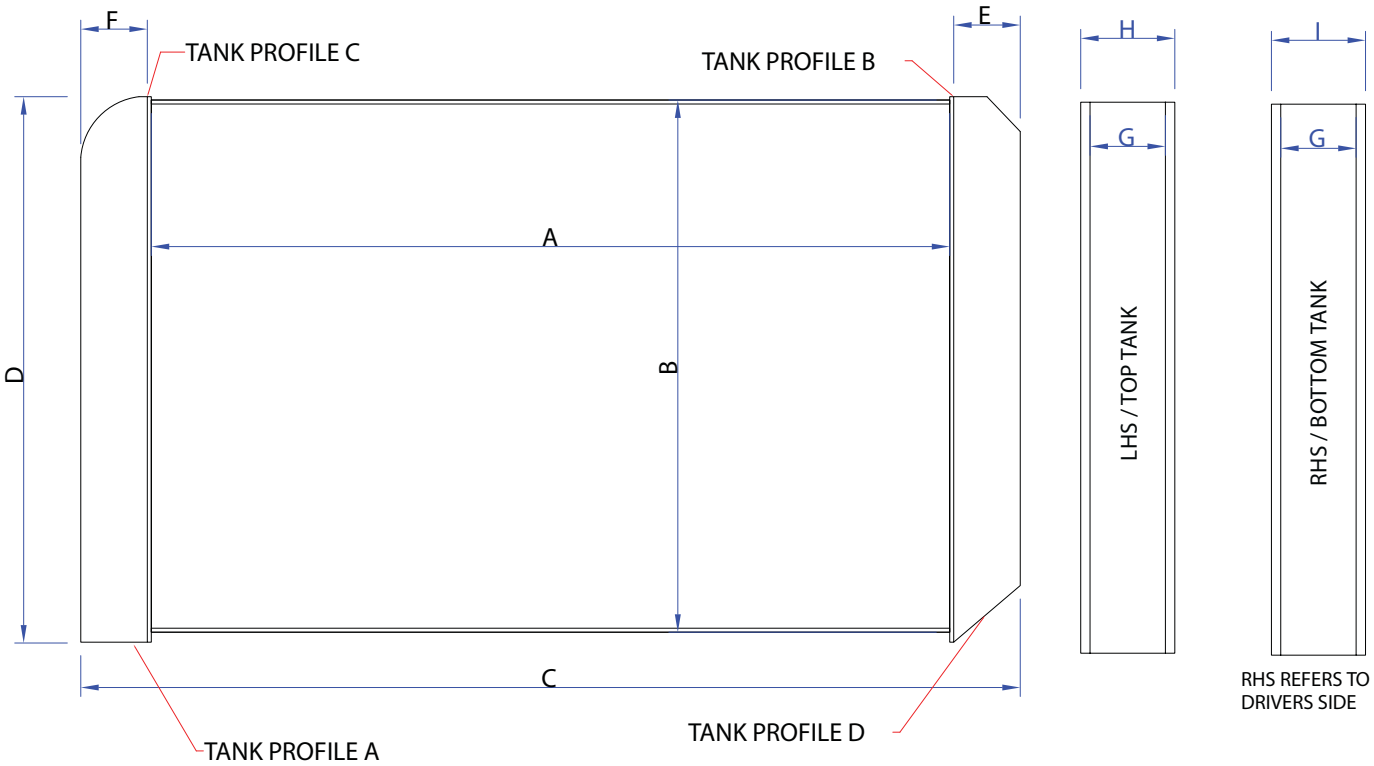

All Dimensions in MM

A. Core Height _____
B. Core Width _____
C. Overall Height _____
D. Overall Width _____
E. Top/LH Tank Height _____
F. Bott/RH Tank Height _____
G. Core Thickness _____
H. Top/LH Tank Width _____
I. Bott/RH Tank Width _____
Tank Profile _____
Fins Per Inch _____
Inlet Pipe Dia/Length _____
Outlet Pipe Dia/Length _____

Large Billet Filler Neck Y / N
Small Billet Filler Neck Y / N

ADDITIONAL DRAWING SPACE

Finish Required	Y/N
Unpolished Mill Finish	_____
Standard Polish	_____
High Polish	_____

Ground Back Welds	Y/N
Top/LH Tank	_____
Bottom/RH Tank	_____

Please draw in the position of the following components on the template drawing:

- Inlet and Outlet Pipe
- Mounting Pins (Diameter and Length Required)
- Threaded Bosses (Thread size Male/Female)
- If Inlet or Outlet Pipe to be angled please draw in space provided ensuring dimensions are provided

ALLOY NPN GENERAL ORDERING INFORMATION

- Core Height is always measured between the headers
- Flanged headers measured inside the turn up
- Please allow approx. 7 working days
- No returns on made-to-measure cores

BRANCH FAX NUMBERS

SA	08 8347 7245	WA	08 9370 4600
VIC	03 9790 4900	TAS	03 6334 3959
QLD	07 3272 7829	NSW	02 9729 2503
GOLD COAST	07 5598 1980	NEWCASTLE	02 4964 4238
TOWNSVILLE	07 4725 1152		

Identifying the Correct Part

Many Adrad performance radiators can be specified with a number of options including transmission (manual/auto), finish (polish level) and fin type (standard or Super Louvre 6mm).

The example right explains how to determine the complete radiator part number for your vehicle type and preferred options.

CHEVROLET '57-

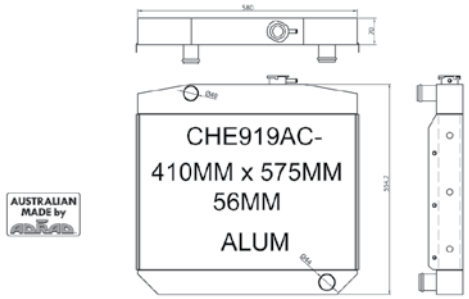

Core			**Header Size**	580 x 70
Fin Options	STD / SL		**Finish Options**	Nat / Sat / Low / High
FPI	18 SL16	**Notes**	MAN / AUTO AVAILABLE	

Understanding the product number

C H E 9 1 9 A C M H S L

Product Code
This piece of the part number indentifies the application or vehicle type

Transmission Options
M = Manual
A = Auto

Finish Options
N = Natural
S = Satin
L = Low Polish
H = High Polish

Fin Options
(blank) = STD
SL = 6mm
Super Louvre

Finish Options Visual Guide

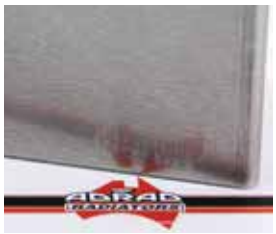


Finish Code	N	S	L	H
Finish Options	Natural	Satin	Low Polish	High Polish
Level of Polish Treatment	No Polish Treatment Applied	Brushed Finish	Bright Finish	Mirror Like Finish

NOTE: Some finish options may not be available. Refer to the product listing for details

Fin Options Visual Guide

STD (Standard) Fin
8mm or 9mm Fin Height


SL Fin
6mm Fin Height
Super Louvre = High Effiency
The SL (Super Louvre) radiator core delivers higher cooling efficiency due to increased numbers of tube in the core. More tubes = More cooling

NOTE: Fin option may not be available. Refer to the product listing for details

ADRAD RADIATORS

PERFORMANCE COOLING

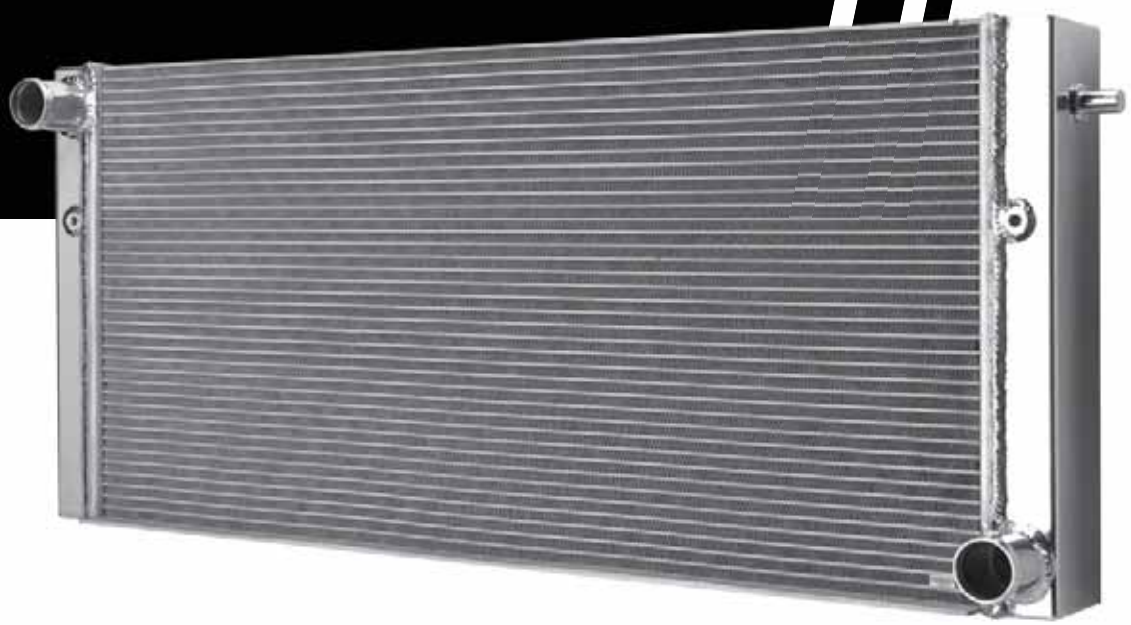

PERFORMANCE RADIATORS

CHEVROLET

CHEVROLET

CAMARO '67-69

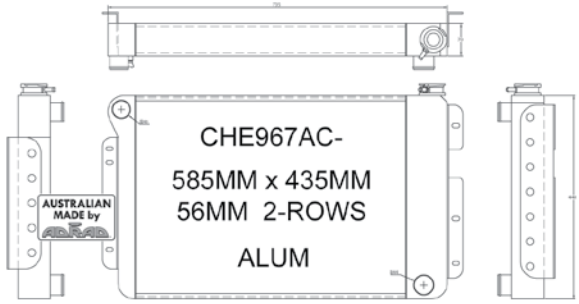

Core			Header Size	440 x 70
Fin Options	STD / SL		Finish Options	Nat / Sat / Low / High
FPI	14 SL14	Notes	MAN / AUTO AVAILABLE	

CAMARO '70-92

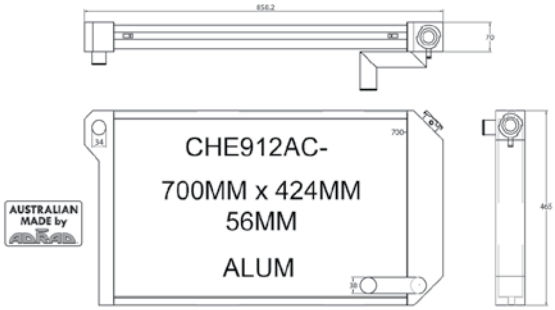

Core			Header Size	465 x 70
Fin Options	STD / SL		Finish Options	Nat / Sat / Low / High
FPI	16 SL16	Notes	MAN / AUTO AVAILABLE	

CHEVROLET '34-

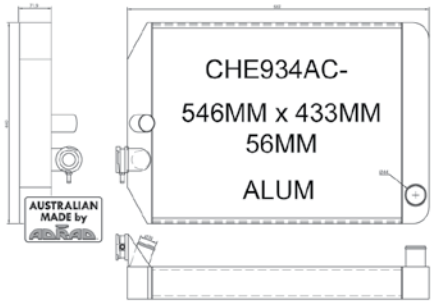

Core			Header Size	437 x 70
Fin Options	STD / SL		Finish Options	Nat / Sat / Low / High
FPI	16 SL16	Notes	MAN / AUTO AVAILABLE	

CHEVROLET '56-69

Core			Header Size	643 x 70
Fin Options	STD / SL		Finish Options	Nat / Sat / Low / High
FPI	16 SL16	Notes	MAN / AUTO AVAILABLE	

CHEVROLET '57-

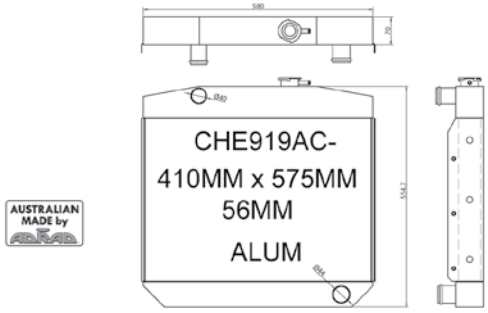

Core			Header Size	580 x 70
Fin Options	STD / SL		Finish Options	Nat / Sat / Low / High
FPI	18 SL16	Notes	MAN / AUTO AVAILABLE	

CHRYSLER

CHRYSLER

NEON '96-99

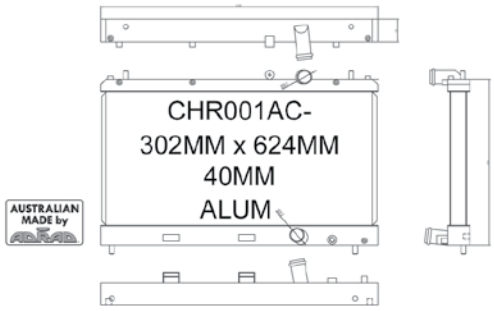

Core			Header Size	628 x 51
Fin Options	STD		Finish Options	Nat / Sat / Low
FPI	18	Notes	MANUAL ONLY	

CHRYSLER

PT CRUISER '00-

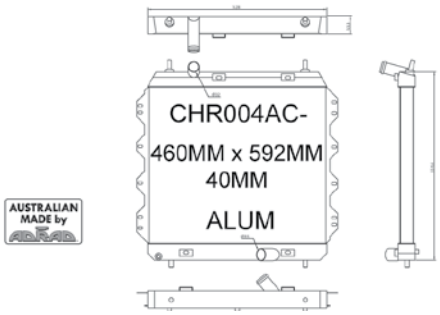

Core		Header Size	528 x 51
Fin Options	STD	Finish Options	Nat / Sat / Low
FPI	18	Notes	MANUAL ONLY

VALIANT VH '71-76

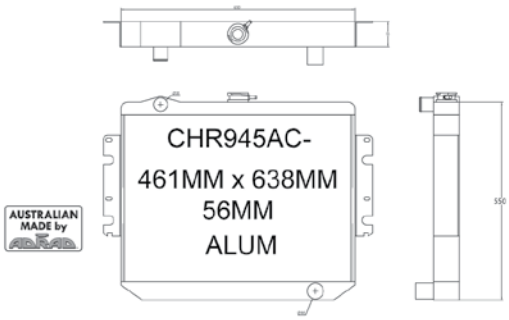

Core		Header Size	650 x 70
Fin Options	STD	Finish Options	Nat / Sat / Low / High
FPI	14	Notes	MANUAL ONLY

DATSUN

DATSUN

DATSUN 1600

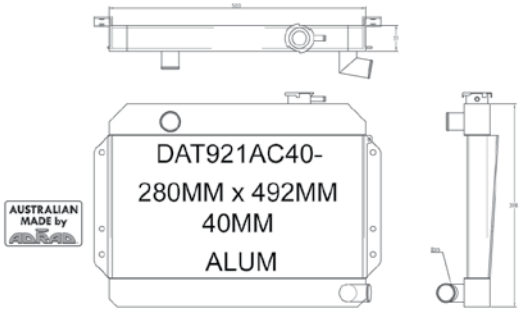

Core		Header Size	503 x 51
Fin Options	STD	Finish Options	Nat / Sat / Low / High
FPI	18	Notes	MANUAL ONLY

DATSUN 260Z '74-79

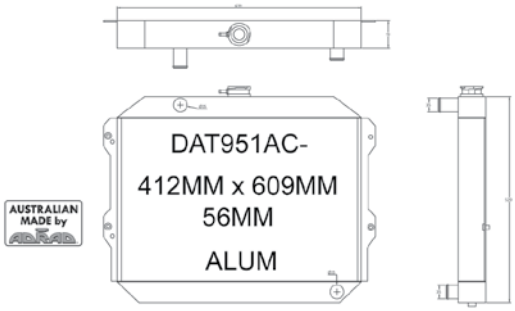

Core		Header Size	619 x 70
Fin Options	STD	Finish Options	Nat / Sat / Low / High
FPI	18	Notes	MANUAL ONLY

DRB

DRB

DRB GT40

Core		Header Size	400 X 70
Fin Options	STD	Finish Options	Natural
FPI	15	Notes	MANUAL ONLY

FORD

FORD

FORD '32-

Core		Header Size	429 x 70
Fin Options	STD	Finish Options	Nat / Sat / Low / High
FPI	16	Notes	MANUAL ONLY

FORD '34-

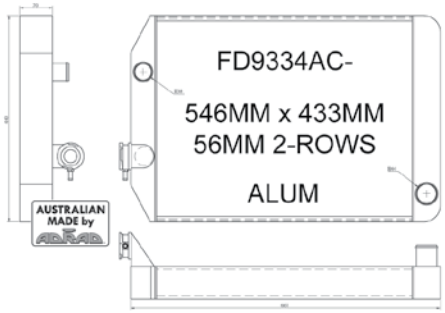

Core		Header Size	4373 x 70
Fin Options	STD / SL	Finish Options	Nat / Sat / Low / High
FPI	16 SL16	Notes	MAN / AUTO AVAILABLE

FORD '37-

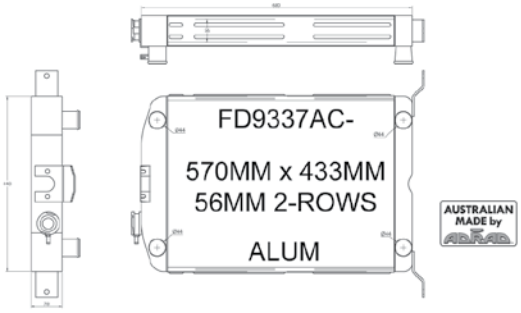

Core		Header Size	440 x 78
Fin Options	STD / SL	Finish Options	Nat / Sat / Low / High
FPI	16 SL16	Notes	MANUAL ONLY

FORD '39-

Core		Header Size	535 x 70
Fin Options	STD / SL	Finish Options	Nat / Sat / Low / High
FPI	16 SL16	Notes	MAN / AUTO AVAILABLE

FORD '48-

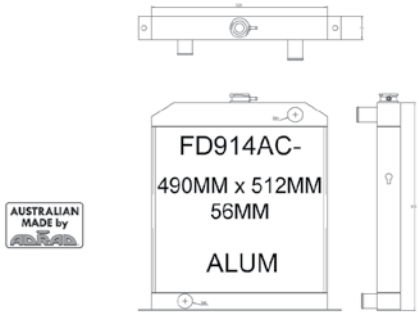

Core		Header Size	520 x 70
Fin Options	STD	Finish Options	Nat / Sat / Low / High
FPI	16	Notes	MAN / AUTO AVAILABLE

BRONCO '85-92

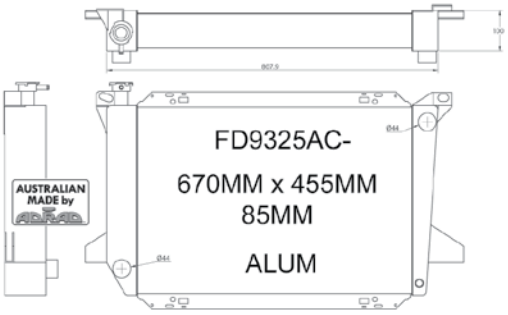

Core		Header Size	463 x 100
Fin Options	STD	Finish Options	Nat / Sat / Low
FPI	16	Notes	MAN / AUTO AVAILABLE

ESCORT '79-81

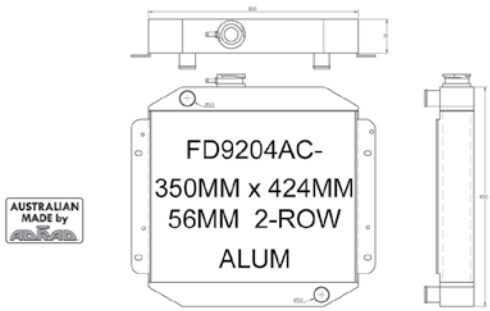

Core		Header Size	430 x 70
Fin Options	STD	Finish Options	Nat / Sat / Low / High
FPI	16	Notes	MANUAL ONLY

F100 / F350 '66-75

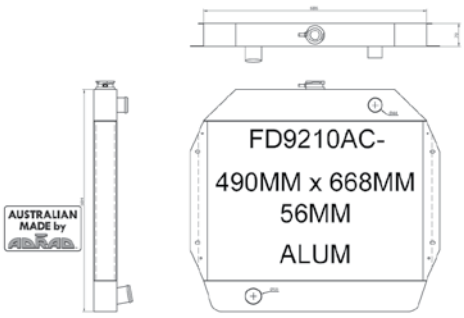

Core			Header Size	686 x 70
Fin Options	STD / SL		Finish Options	Nat / Sat / Low
FPI	18 SL16	Notes	MAN / AUTO AVAILABLE	

F100 / F350 '66-75

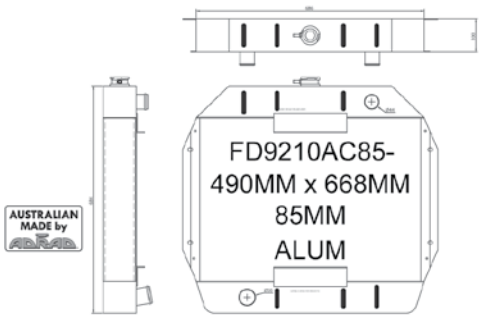

Core			Header Size	686 x 100
Fin Options	STD		Finish Options	Nat / Sat / Low
FPI	18	Notes	MAN / AUTO AVAILABLE	

FALCON XT '68-69 (CLEVELAND)

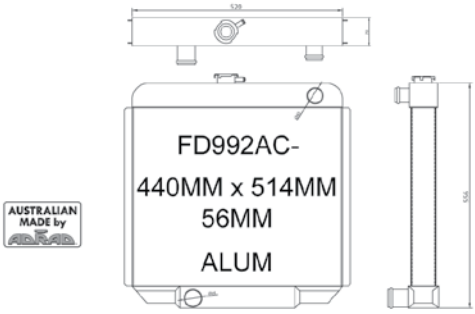

Core			Header Size	520 x 75
Fin Options	STD / SL		Finish Options	Nat / Sat / Low / High
FPI	16 SL16	Notes	MANUAL ONLY	

FALCON XW/XY 6 Cyl '69-72

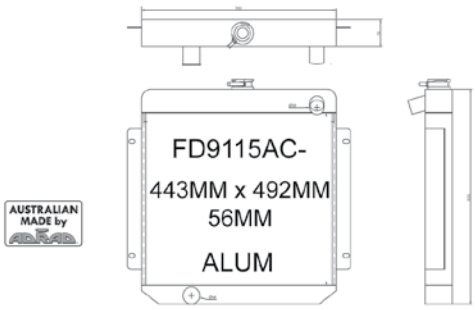

Core			Header Size	502 x 70
Fin Options	STD		Finish Options	Nat / Sat / Low / High
FPI	16	Notes	MAN / AUTO AVAILABLE	

FALCON XW/XY CLEVELAND V8 '69-72

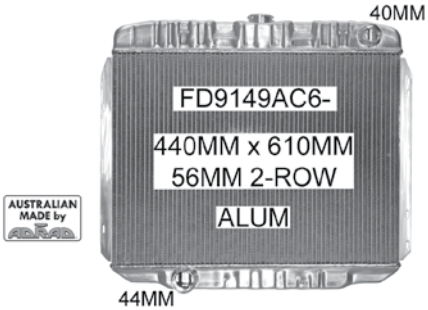

Core	FD9149A		Header Size	610 x 70
Fin Options	STD / SL		Finish Options	Nat / Sat / Low / High
FPI	14 SL14	Notes	MAN / AUTO AVAILABLE	

FALCON XW/XY WINDSOR V8 '69-72

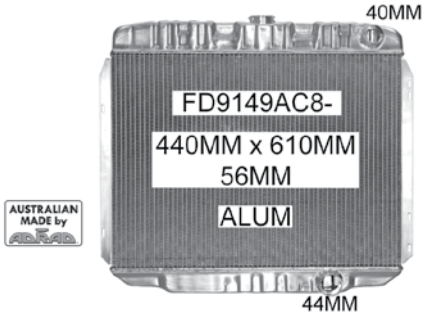

Core	FD9149A		Header Size	610 x 70
Fin Options	STD / SL		Finish Options	Nat / Sat / Low / High
FPI	14 SL14	Notes	MAN / AUTO AVAILABLE	

FALCON XA-XC '72-77 (CLEVELAND 302)

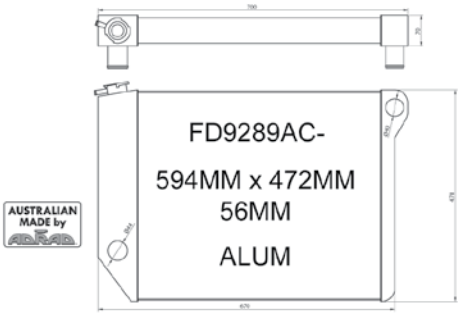

Core			Header Size	478 x 70
Fin Options	STD / SL		Finish Options	Nat / Sat / Low / High
FPI	18 SL18	Notes	MAN / AUTO AVAILABLE	

FALCON XA-XC '72-77 (CLEVELAND 351)

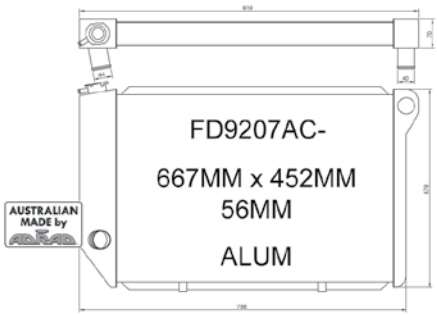

Core			Header Size	478 x 70
Fin Options	STD / SL		Finish Options	Nat / Sat / Low / High
FPI	18 SL18	Notes	SUITS WITH A/C / MAN / AUTO AVAILABLE	

FALCON XC/XD/XE/XF '77-86 (CLEVELAND)

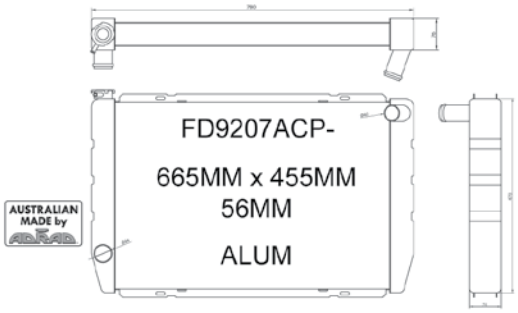

Core			Header Size	470 x 76
Fin Options	STD / SL		Finish Options	Nat / Sat / Low / High
FPI	18 SL18	Notes	MAN / AUTO AVAILABLE	

FALCON EA-ED '88-94

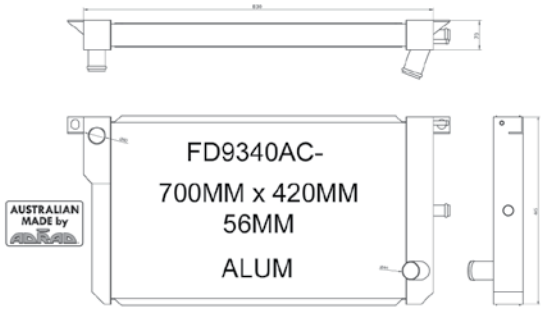

Core			Header Size	450 x 70
Fin Options	STD		Finish Options	Nat / Sat / Low / High
FPI	18	Notes	MAN / AUTO AVAILABLE	

FALCON EF/EL '94-96

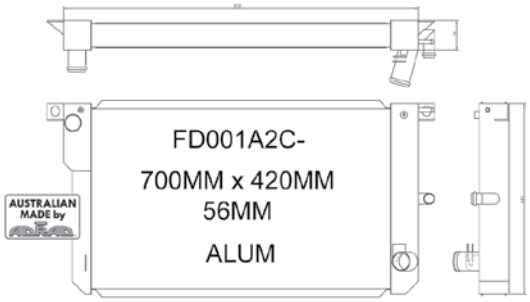

Core			Header Size	450 x 70
Fin Options	STD		Finish Options	Nat / Sat / Low / High
FPI	18	Notes	MAN / AUTO AVAILABLE	

FALCON AU 6&8cyl '98-02

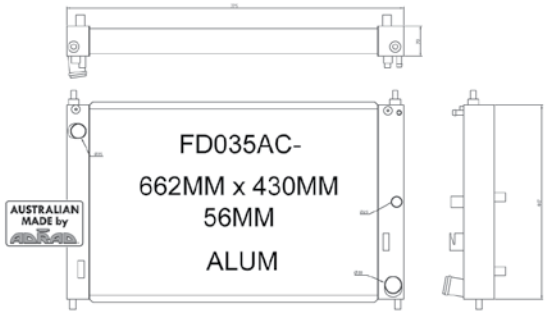

Core			Header Size	447 x 70
Fin Options	STD		Finish Options	Nat / Sat / Low / High
FPI	15	Notes	MAN / AUTO AVAILABLE	

FALCON BA/BF '02-08

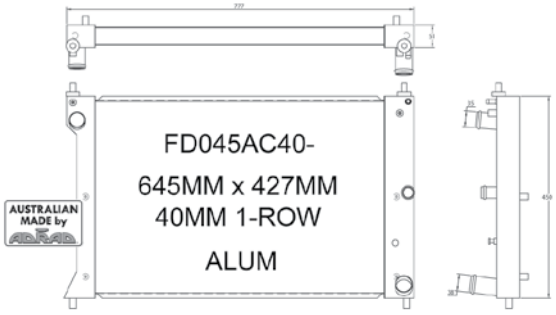

Core			Header Size	450 x 51
Fin Options	STD / SL		Finish Options	Nat / Sat / Low / High
FPI	18 SL18	Notes	MAN / AUTO AVAILABLE	

FALCON BA/BF '02-08

Core			Header Size	450 x 70
Fin Options	STD		Finish Options	Nat / Sat / Low / High
FPI	18	Notes	MAN / AUTO AVAILABLE	

FALCON FG '08-

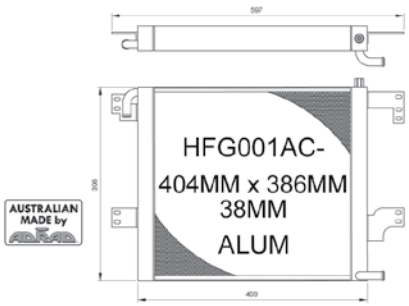

Core			Header Size	396 X 51
Fin Options	STD		Finish Options	Nat / Sat / Low / High
FPI	16	Notes	To Suit Harrop Intercooler / Supercharger	

LASER KC/KE '85-90

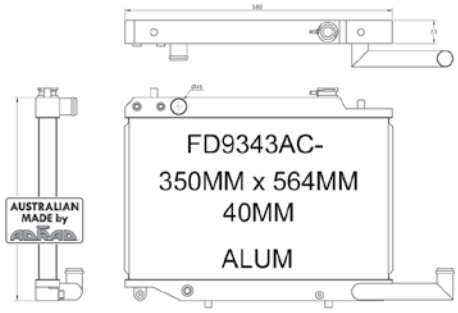

Core			Header Size	580 x 51
Fin Options	STD		Finish Options	Nat / Sat / Low
FPI	16	Notes	MANUAL ONLY	

LASER KJ/KL/KM '10/94-2/99

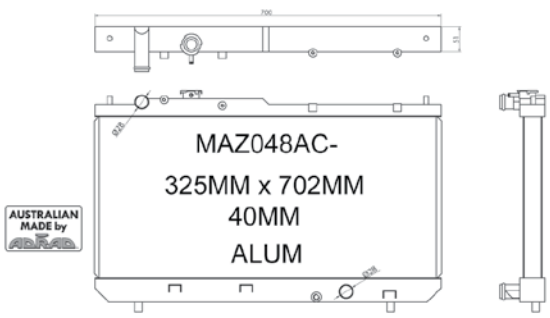

Core			Header Size	700 x 51
Fin Options	STD		Finish Options	Nat / Sat / Low
FPI	18	Notes	MANUAL ONLY	

MUSTANG '64-66

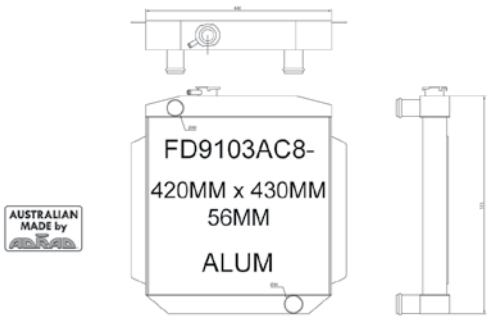

Core			Header Size	440 x 70
Fin Options	STD / SL		Finish Options	Nat / Sat / Low / High
FPI	18 SL18	Notes	MAN / AUTO AVAILABLE	

MUSTANG '64-66 (WINDSOR)

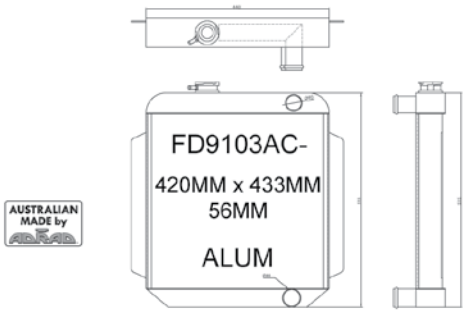

Core			Header Size	440 x 70
Fin Options	STD / SL		Finish Options	Nat / Sat / Low / High
FPI	18 SL18	Notes	MAN / AUTO AVAILABLE	

MUSTANG '68-70 (CLEVELAND)

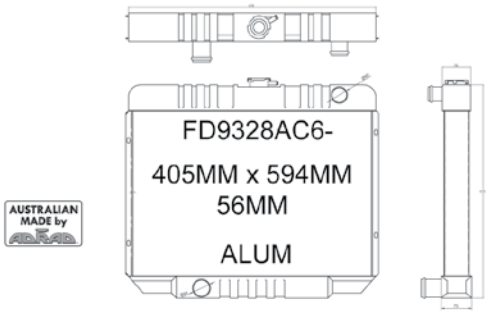

Core			Header Size	610 x 70/75
Fin Options	STD / SL		Finish Options	Nat / Sat / Low / High
FPI	15 SL14	Notes	TANKS DIFFER TO OE SPEC	

MUSTANG '68-70 (WINDSOR)

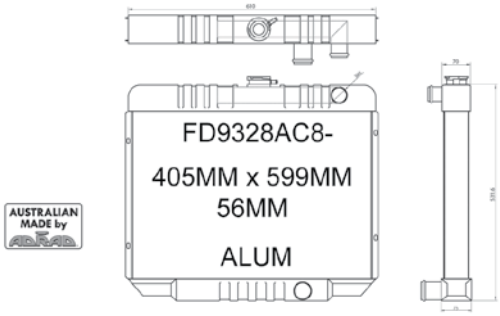

Core			Header Size	610 x 70/75
Fin Options	STD / SL		Finish Options	Nat / Sat / Low / High
FPI	15 SL14	Notes	TANKS DIFFER TO OE SPEC	

MUSTANG '97-04

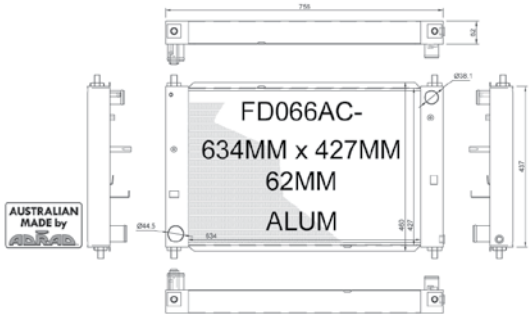

Core			Header Size	756 x 62
Fin Options	STD / SL		Finish Options	Nat / Sat / Low / High
FPI	16 SL16	Notes	MANUAL ONLY	

TRANSIT VAN '84-

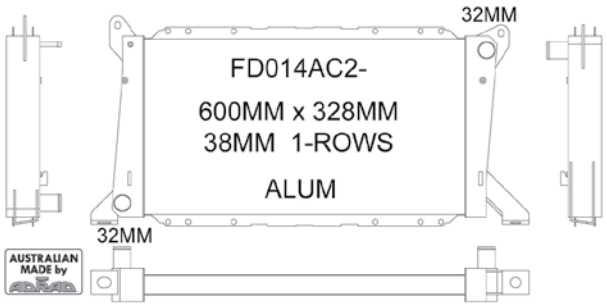

Core			Header Size	339 x 62
Fin Options	STD		Finish Options	Natural
FPI	18	Notes	DIRECT AFTERMARKET REPLACEMENT	

Core			Header Size	
Fin Options			Finish Options	
FPI		Notes		

HOLDEN

HOLDEN EH '63-65

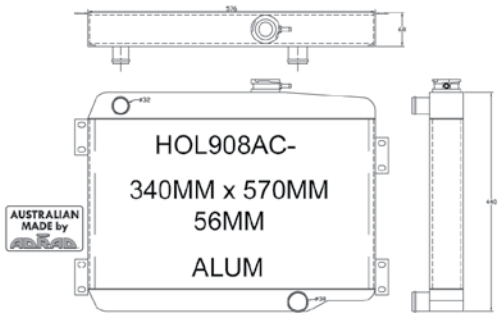

Core		Header Size	576 x 68
Fin Options	STD / SL	Finish Options	Nat / Sat / Low / High
FPI	18 SL16	Notes	MAN / AUTO AVAILABLE

HOLDEN HR '66-68

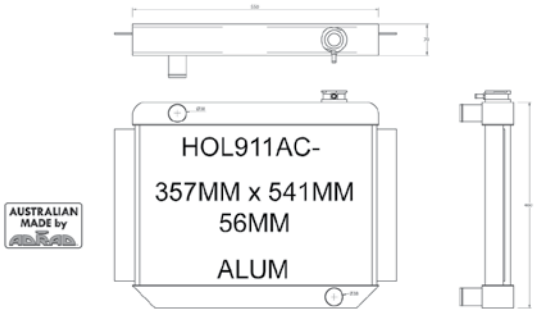

Core		Header Size	550 x 70
Fin Options	STD / SL	Finish Options	Nat / Sat / Low / High
FPI	18 SL16	Notes	MAN / AUTO AVAILABLE

HOLDEN HK-HG V8 '68-71 (HOLDEN)

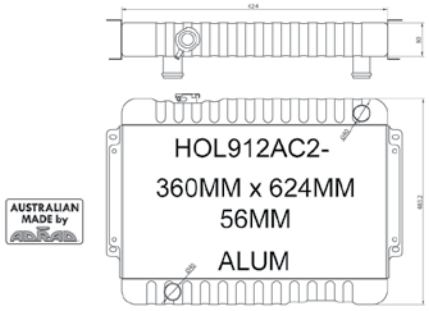

Core		Header Size	624 x 80
Fin Options	STD / SL	Finish Options	Nat / Sat / Low / High
FPI	16 SL16	Notes	MAN / AUTO AVAILABLE

HOLDEN HK-HG V8 '68-71 (CHEV)

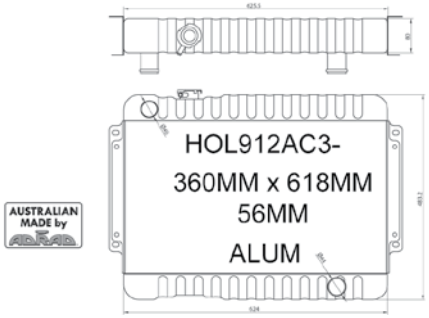

Core		Header Size	624 x 80
Fin Options	STD / SL	Finish Options	Nat / Sat / Low / High
FPI	16 SL16	Notes	MAN / AUTO AVAILABLE

COMMODORE VB-VK 6cyl '78-86

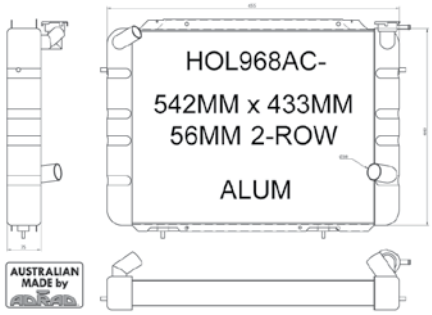

Core		Header Size	440 x 75
Fin Options	STD	Finish Options	Nat / Sat / Low / High
FPI	18	Notes	MAN / AUTO AVAILABLE

COMMODORE VB-VK V8 '78-86 (CHEV)

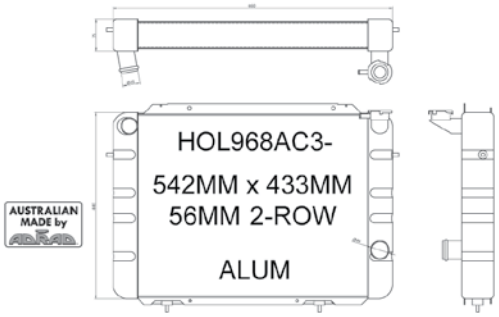

Core		Header Size	433 x 72
Fin Options	STD	Finish Options	Nat / Sat / Low / High
FPI	18	Notes	MAN / AUTO AVAILABLE

COMMODORE VB-VK V8 '78-86 (HOLDEN)

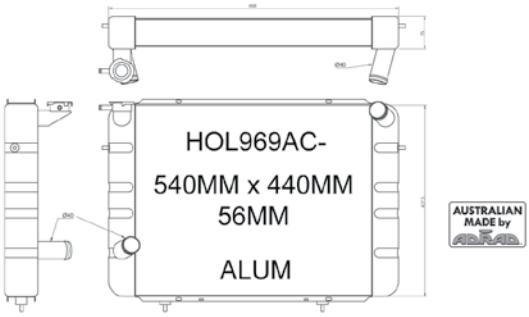

Core	HOL969A	Header Size	440 x 75
Fin Options	STD / SL	Finish Options	Nat / Sat / Low / High
FPI	18 SL18	Notes	MAN / AUTO AVAILABLE

COMMODORE VL 6cyl '86-88

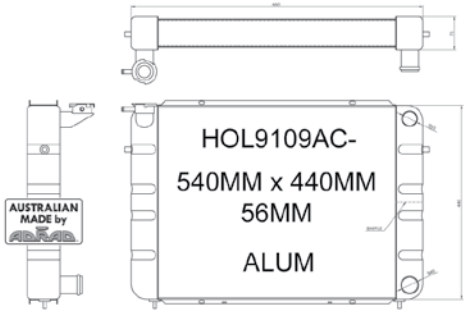

Core	HOL969A	**Header Size**	440 x 75
Fin Options	STD	**Finish Options**	Nat / Sat / Low / High
FPI	15	**Notes**	MAN / AUTO AVAILABLE

COMMODORE VL/VN/VP/VQ 5.0ltr '86-93

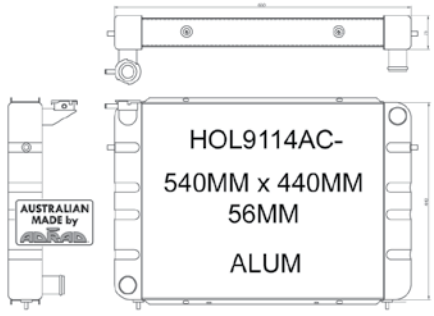

Core	HOL001A	**Header Size**	440 X 75
Fin Options	STD / SL	**Finish Options**	Nat / Sat / Low / High
FPI	18 SL18	**Notes**	MAN / AUTO AVAILABLE

COMMODORE VP-VS '91-00

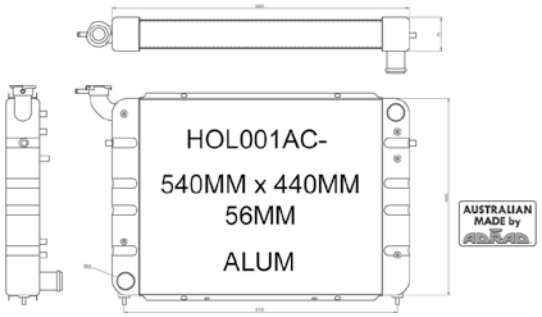

Core	HOL001A	**Header Size**	440 x 75
Fin Options	STD	**Finish Options**	Nat / Sat / Low / High
FPI	18	**Notes**	MAN / AUTO AVAILABLE

COMMODORE VT V6/V8

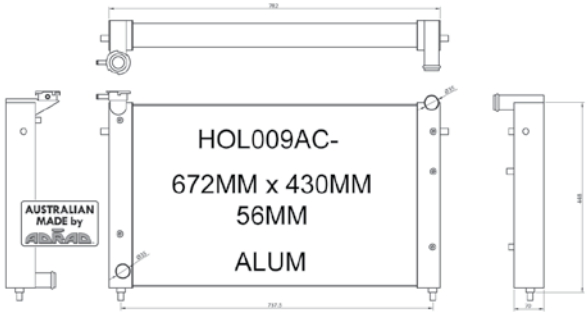

Core	HOL009A	**Header Size**	448 x 70
Fin Options	STD / SL	**Finish Options**	Nat / Sat / Low / High
FPI	18 SL18	**Notes**	WITH FILLER NECK / MAN / AUTO AVAIL.

COMMODORE VT/VX/VU V8

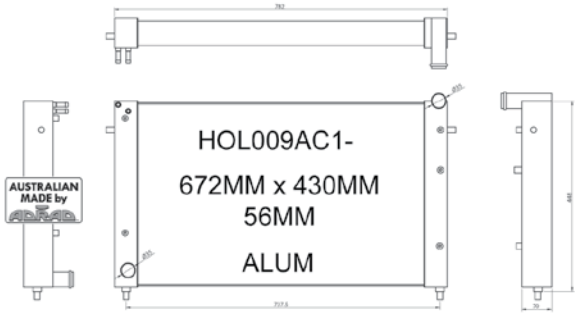

Core	HOL009A	**Header Size**	438 x 70
Fin Options	STD / SL	**Finish Options**	Nat / Sat / Low / High
FPI	18 SL18	**Notes**	NO FILLER NECK / MAN / AUTO AVAIL.

COMMODORE VY V8 '02-04

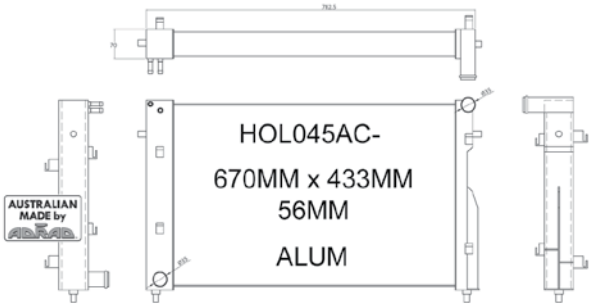

Core		**Header Size**	450 x 70
Fin Options	STD / SL	**Finish Options**	Nat / Sat / Low / High
FPI	18 SL18	**Notes**	MAN / AUTO AVAILABLE

COMMODORE VZ V8 '04-06

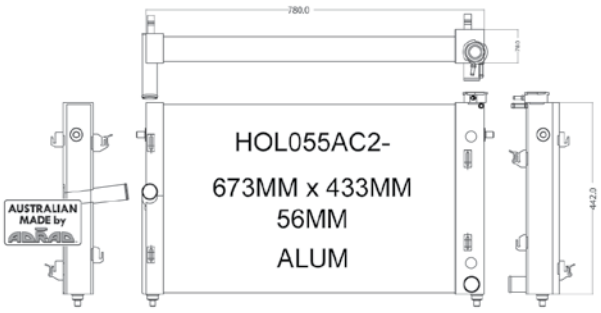

Core		**Header Size**	442 x 74/66
Fin Options	STD / SL	**Finish Options**	Nat / Sat / Low / High
FPI	18 SL18	**Notes**	MAN / AUTO AVAILABLE

COMMODORE VE V8 '8/06-

Core		**Header Size**	788 x 58
Fin Options	STD / SL	**Finish Options**	Nat / Sat / Low / High
FPI	17 SL16	**Notes**	MAN / AUTO AVAILABLE

HOLDEN

COMMODORE VE V8 '8/06-

Core			Header Size	788 x 70
Fin Options	STD / SL		Finish Options	Nat / Sat / Low / High
FPI	17 SL16	Notes	MAN / AUTO AVAILABLE	

GEMINI TX-TG '75-85

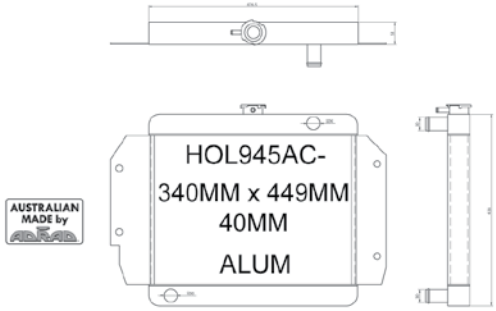

Core			Header Size	475 x 51
Fin Options	STD		Finish Options	Nat / Sat / Low / High
FPI	18	Notes	MANUAL ONLY	

KINGSWOOD HQ-HZ '71-80 (CHEV)

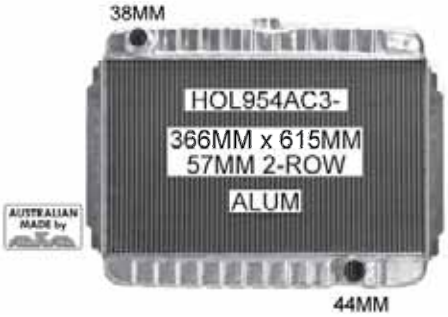

Core	HOL954A		Header Size	642 x 70
Fin Options	STD / SL		Finish Options	Nat / Sat / Low / High
FPI	16 SL16	Notes	MAN / AUTO AVAILABLE	

KINGSWOOD HQ-HZ '71-80 (CHEV)

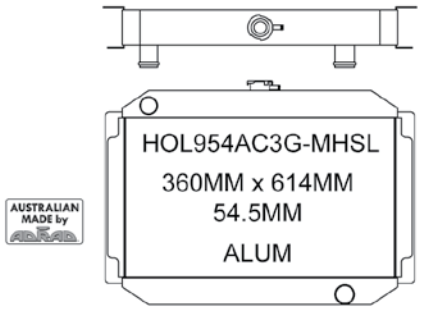

Core			Header Size	625 x 70
Fin Options	SL		Finish Options	High
FPI	16	Notes	MANUAL ONLY	

KINGSWOOD HQ-HZ '71-80 (CHEV)

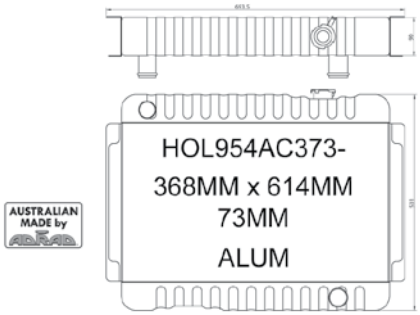

Core			Header Size	624 X 90
Fin Options	STD		Finish Options	Nat / Sat / Low / High
FPI	16	Notes	MAN / AUTO AVAILABLE	

KINGSWOOD HQ-HZ '71-80 (HOLDEN)

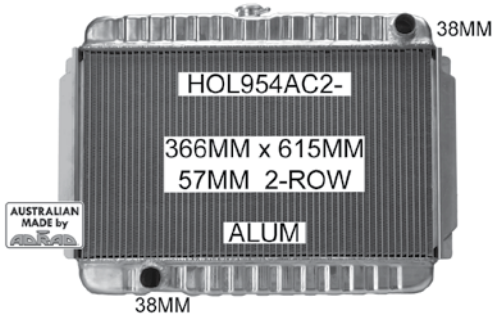

Core	HOL954A		Header Size	642 x 70
Fin Options	STD / SL		Finish Options	Nat / Sat / Low / High
FPI	16 SL16	Notes	MAN / AUTO AVAILABLE	

STATESMAN WB 6cyl '80-84

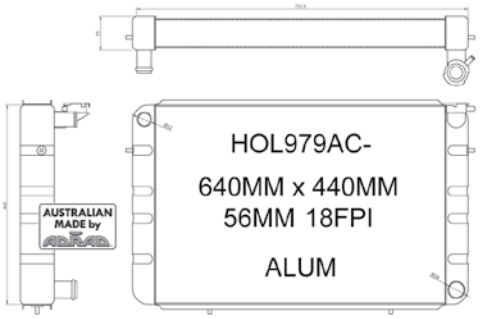

Core			Header Size	440 x 75
Fin Options	STD		Finish Options	Nat / Sat / Low / High
FPI	18	Notes	MAN / AUTO AVAILABLE	

STATESMAN WB V8 '80-84 (HOLDEN)

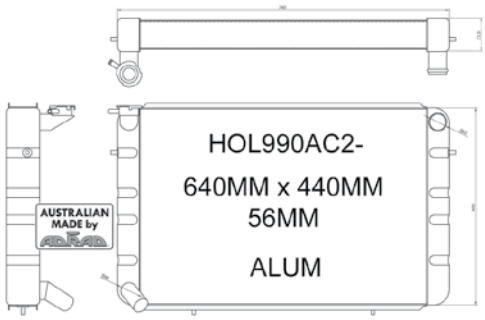

Core	HOL990A		Header Size	440 x 75
Fin Options	STD / SL		Finish Options	Nat / Sat / Low / High
FPI	18 SL16	Notes	MAN / AUTO AVAILABLE	

STATESMAN WB V8 '80-84 (CHEV)

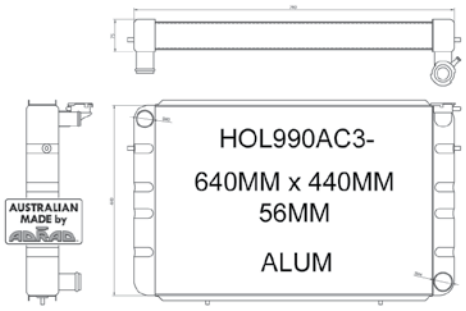

Core	HOL990A		Header Size	440 x 75
Fin Options	STD / SL		Finish Options	Nat / Sat / Low / High
FPI	18 SL16	Notes	MAN / AUTO AVAILABLE	

TORANA LC/LJ 6cyl '69-74

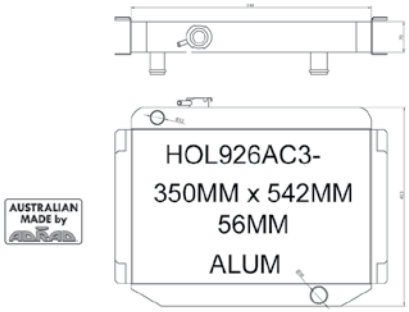

Core			Header Size	548 x 70
Fin Options	STD		Finish Options	Nat / Sat / Low / High
FPI	16	Notes	MAN / AUTO AVAILABLE	

TORANA LC/LJ V8 '69-74

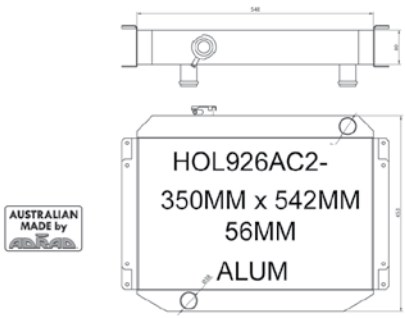

Core			Header Size	548 x 80
Fin Options	STD / SL		Finish Options	Nat / Sat / Low / High
FPI	16 SL16	Notes	MAN / AUTO AVAILABLE	

TORANA LH/LX V8 '74-78 (CHEV)

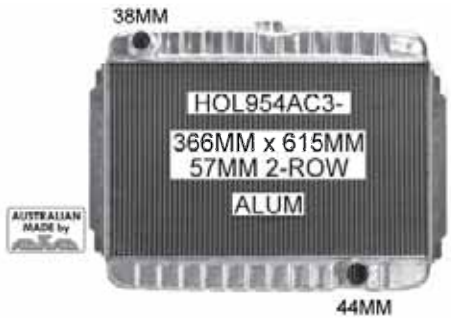

Core	HOL954A		Header Size	642 x 70
Fin Options	STD / SL		Finish Options	Nat / Sat / Low / High
FPI	16 SL16	Notes	MAN / AUTO AVAILABLE	

TORANA LH/LX V8 '74-78 (CHEV)

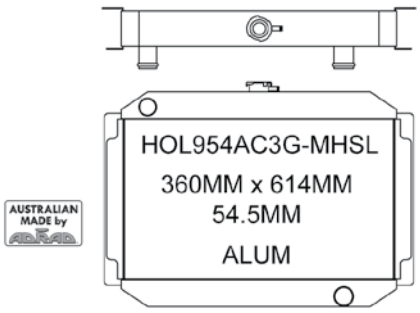

Core			Header Size	625 x 70
Fin Options	SL		Finish Options	High
FPI	16	Notes	MANUAL ONLY	

TORANA LH/LX V8 '74-78 (CHEV)

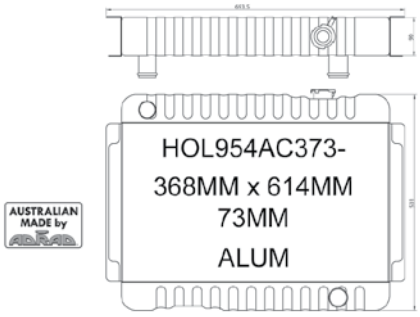

Core			Header Size	624 X 90
Fin Options	STD		Finish Options	Nat / Sat / Low / High
FPI	16	Notes	MAN / AUTO AVAILABLE	

TORANA LH/LX V8 '74-78 (HOLDEN)

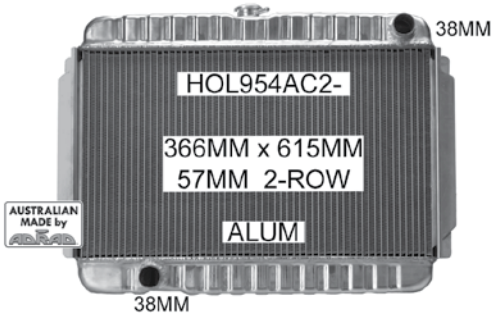

Core	HOL954A		Header Size	642 x 70
Fin Options	STD / SL		Finish Options	Nat / Sat / Low / High
FPI	16 SL16	Notes	MAN / AUTO AVAILABLE	

Core			Header Size	
Fin Options			Finish Options	
FPI		Notes		

HONDA

HONDA

ACCORD CB '89-93

Core		Header Size	687 x 60
Fin Options	STD	Finish Options	
FPI	13	Notes	KOYO K-SPORT

ACCORD CD 2.2ltr '93-97

Core		Header Size	697 x 60
Fin Options	STD	Finish Options	
FPI	13	Notes	KOYO K-SPORT

CIVIC EG/EH/EK '91-00 (DENSO TYPE)

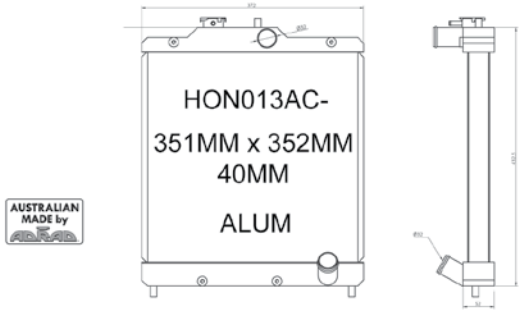

Core		Header Size	372 x 52
Fin Options	STD	Finish Options	Nat / Sat / Low
FPI	18	Notes	MANUAL ONLY

CIVIC EG/EH/EK '91-00 (DENSO TYPE)

Core		Header Size	371 x 60
Fin Options	STD	Finish Options	
FPI	13	Notes	KOYO K-SPORT

CIVIC SI / VTI-R 1.6ltr '91-00 (TOYO TYPE)

Core		Header Size	368 x 60
Fin Options	STD	Finish Options	
FPI	13	Notes	KOYO K-SPORT

CRX EG 1.6ltr '92-98

Core		Header Size	368 x 60
Fin Options	STD	Finish Options	
FPI	13	Notes	KOYO K-SPORT

INTEGRA DC '93-01 (DENSO TYPE)

Core		Header Size	678 x 60
Fin Options	STD	Finish Options	
FPI	13	Notes	KOYO K-SPORT

INTEGRA DC '93-01 (SHOWA TYPE)

Core			**Header Size**	687 x 60
Fin Options	STD		**Finish Options**	
FPI	13	**Notes**	KOYO K-SPORT	

INTEGRA DC 2.0ltr '01-06

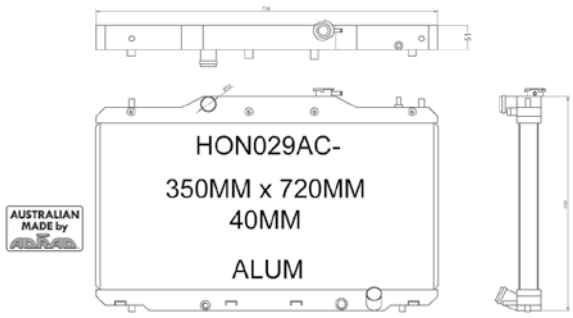

Core			**Header Size**	718 x 51
Fin Options	STD		**Finish Options**	Nat / Sat / Low
FPI	18	**Notes**	MANUAL ONLY	

NSX '91-01

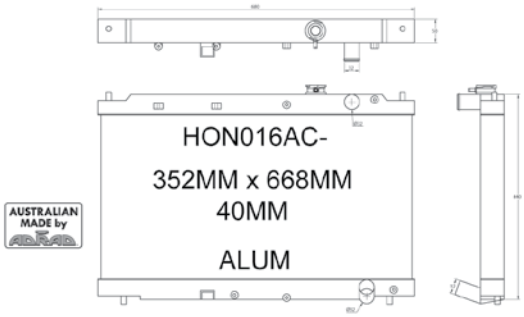

Core			**Header Size**	680 x 50
Fin Options	STD		**Finish Options**	Nat / Sat / Low
FPI	18	**Notes**	MANUAL ONLY	

PRELUDE BB2 '91-96

Core			**Header Size**	687 x 60
Fin Options	STD		**Finish Options**	
FPI	13	**Notes**	KOYO K-SPORT	

PRELUDE BB2 VTi-R '91-96

Core			**Header Size**	716 x 60
Fin Options	STD		**Finish Options**	
FPI	13	**Notes**	KOYO K-SPORT	

PRELUDE BB5/BB6 '97-01

Core			**Header Size**	697 x 60
Fin Options	STD		**Finish Options**	
FPI	13	**Notes**	KOYO K-SPORT	

S2000 '99-

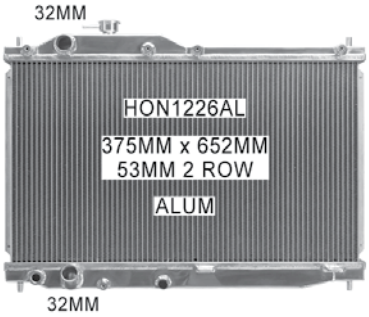

Core			**Header Size**	678 x 60
Fin Options	STD		**Finish Options**	
FPI	13	**Notes**	KOYO K-SPORT	

Core			Header Size	
Fin Options			Finish Options	
FPI		Notes		

HUMMER

HUMMER

HUMMER H2 '03-09

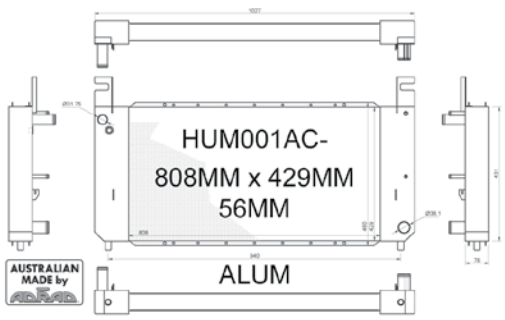

Core			Header Size	431 x 76
Fin Options	STD		Finish Options	Nat / Sat
FPI	16	Notes	MANUAL ONLY	

HYUNDAI

HYUNDAI

TERRACAN 2.9ltr Diesel '01-05

Core			Header Size	573 x 65
Fin Options	STD		Finish Options	Natural
FPI	18	Notes	MANUAL ONLY	

LANDROVER

LANDROVER

DEFENDER 2.5ltr Turbo Diesel '92-98

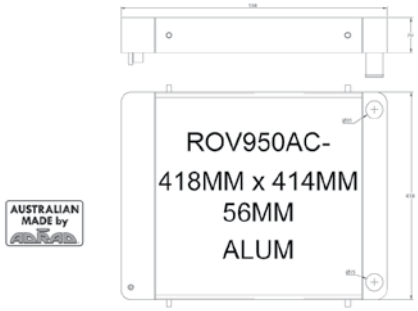

Core			Header Size	418 x 70
Fin Options	STD		Finish Options	Nat / Sat / Low
FPI	16	Notes	MAN / AUTO AVAILABLE	

RANGE ROVER '72-83

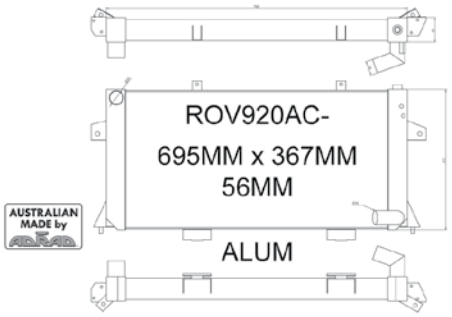

Core			Header Size	372 x 68
Fin Options	STD		Finish Options	Nat / Sat / Low
FPI	18	Notes	MAN / AUTO AVAILABLE	

Core			Header Size	
Fin Options			Finish Options	
FPI		Notes		

MAZDA

323 BG 1.8ltr '91-96

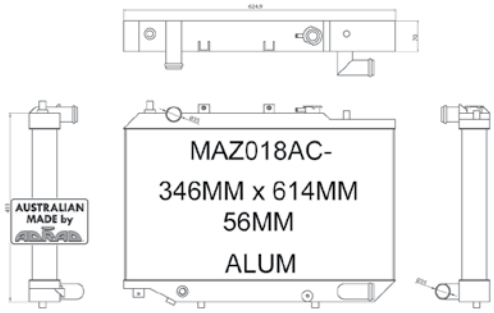

Core		Header Size	624 x 70
Fin Options	STD	Finish Options	Nat / Sat / Low
FPI	16	Notes	MANUAL ONLY

323 PROTEGE BA '94-98

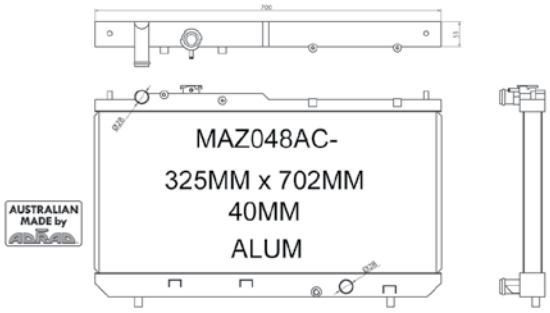

Core		Header Size	700 x 51
Fin Options	STD	Finish Options	Nat / Sat / Low
FPI	18	Notes	MANUAL ONLY

MX5 NA 1.6ltr/1.8ltr '89-97

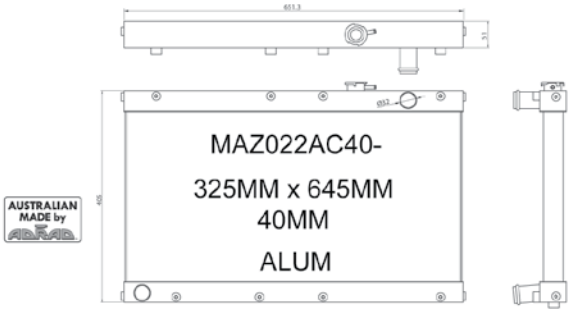

Core		Header Size	650 x 51
Fin Options	STD / SL	Finish Options	Nat / Sat / Low
FPI	18 SL18	Notes	MANUAL ONLY

MX5 NA 1.6ltr/1.8ltr '89-97

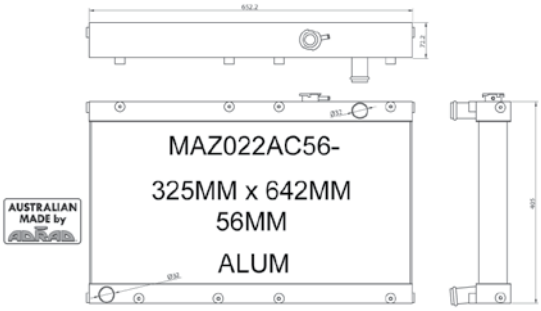

Core		Header Size	650 x 70
Fin Options	STD / SL	Finish Options	Nat / Sat / Low
FPI	18 SL16	Notes	MANUAL ONLY

MX5 NA 1.6ltr/1.8ltr '89-97

Core		Header Size	669 x 60
Fin Options	STD	Finish Options	
FPI	13	Notes	KOYO K-SPORT

MX5 NB 1.8ltr '98-05

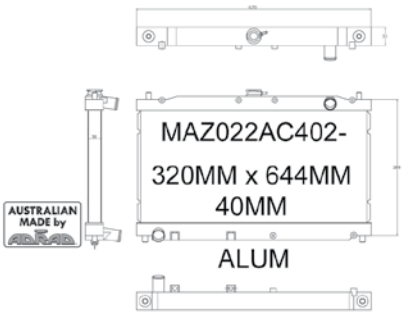

Core		Header Size	670 x 51
Fin Options	STD / SL	Finish Options	Nat / Sat / Low
FPI	18 SL18	Notes	MANUAL ONLY

MX5 NB 1.8ltr '98-05

Core		Header Size	667 x 60
Fin Options	STD	Finish Options	
FPI	13	Notes	KOYO K-SPORT

MAZDA

RX-2/3/4/7 Series 1-3

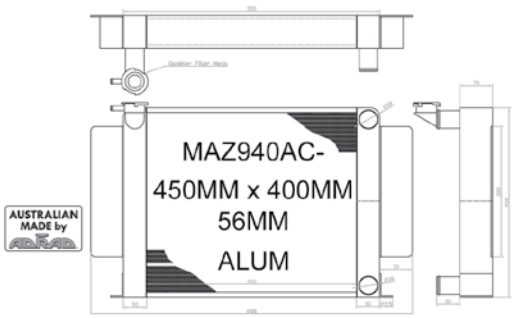

Core		Header Size	406 x 70
Fin Options	STD / SL	Finish Options	Nat / Sat / Low
FPI	14 SL14	Notes	MANUAL ONLY

RX-7 Series 4 '86-89

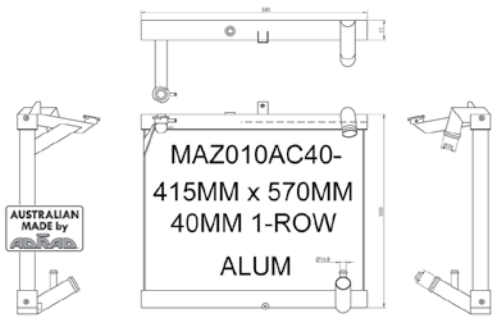

Core		Header Size	585 x 51
Fin Options	STD / SL	Finish Options	Nat / Sat / Low
FPI	18 SL18	Notes	MANUAL ONLY

RX-7 Series 4 '86-89

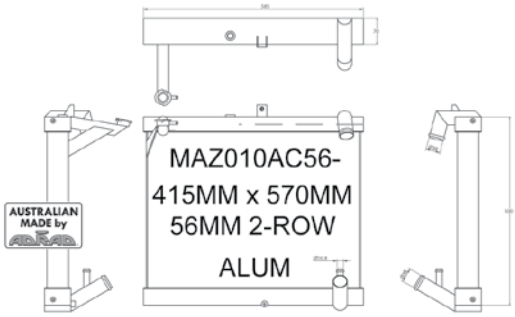

Core		Header Size	585 x 70
Fin Options	STD / SL	Finish Options	Nat / Sat / Low
FPI	18 SL16	Notes	MANUAL ONLY

RX-7 Series 4 '86-89

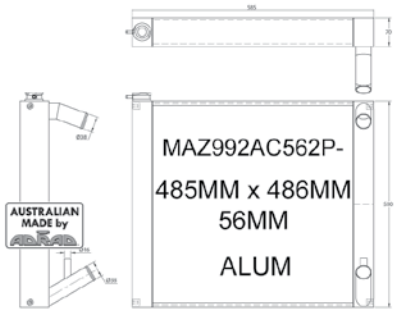

Core		Header Size	500 x 70
Fin Options	STD	Finish Options	Nat / Sat / Low
FPI	14	Notes	2 PASS / MANUAL ONLY

RX-7 Series 4 '86-89

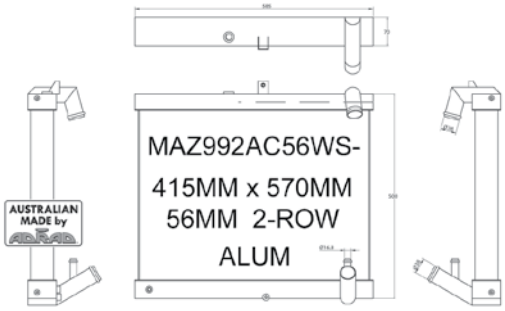

Core		Header Size	585 x 70
Fin Options	STD	Finish Options	Nat / Sat / Low
FPI	18	Notes	WITH SENSOR BOSS / MANUAL ONLY

RX-7 Series 4/5 '86-92

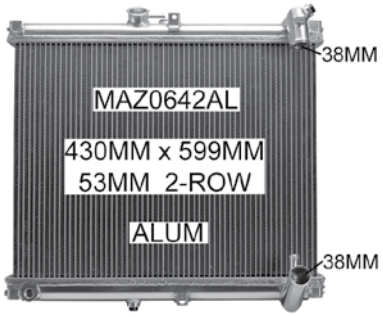

Core		Header Size	587 x 60
Fin Options	STD	Finish Options	
FPI	13	Notes	KOYO K-SPORT

RX-7 Series 5 '90-91

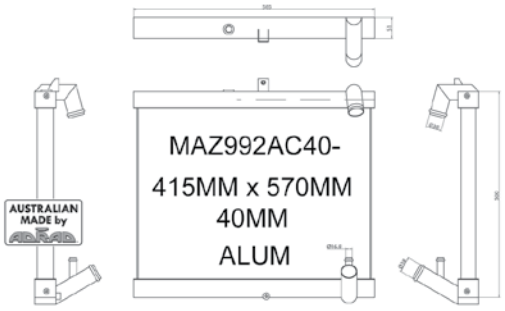

Core		Header Size	585 x 51
Fin Options	STD / SL	Finish Options	Nat / Sat / Low
FPI	18 SL18	Notes	MANUAL ONLY

RX-7 Series 5 '90-91

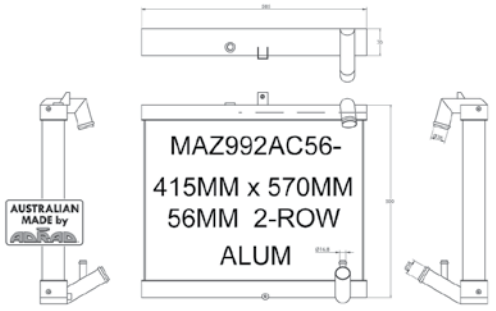

Core		Header Size	585 x 70
Fin Options	STD	Finish Options	Nat / Sat / Low
FPI	18	Notes	MANUAL ONLY

RX-7 Series 5 '90-91

Core		Header Size	592 x 60
Fin Options	STD	Finish Options	
FPI	13	Notes	KOYO K-SPORT

RX-7 Series 6/7/8 '92-02

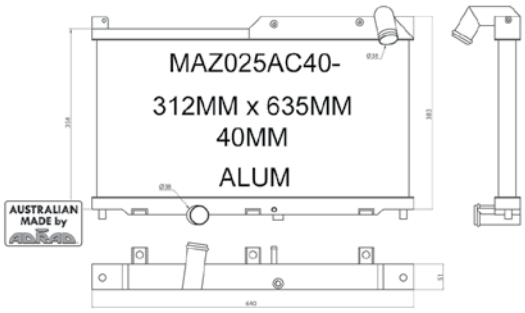

Core		Header Size	640 x 51
Fin Options	STD / SL	Finish Options	Nat / Sat / Low
FPI	18 SL18	Notes	MANUAL ONLY

RX-7 Series 6/7/8 '92-02

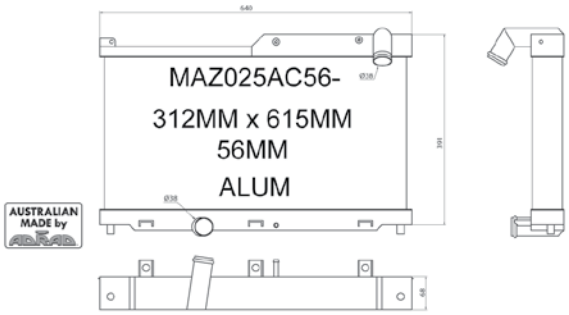

Core		Header Size	640 x 68
Fin Options	STD / SL	Finish Options	Nat / Sat / Low
FPI	15 SL14	Notes	MANUAL ONLY

RX-7 Series 6/7/8 '92-02

Core		Header Size	647 x 60
Fin Options	STD	Finish Options	
FPI	13	Notes	KOYO K-SPORT

RX8 FD Series 1 '03-08

Core		Header Size	669 x 43
Fin Options	STD	Finish Options	
FPI	13	Notes	KOYO K-SPORT

RX8 FD Series 1 '03-08

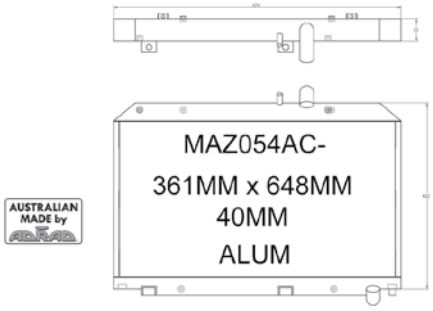

Core		Header Size	670 x 51
Fin Options	STD / SL	Finish Options	Nat / Sat / Low
FPI	18 SL16	Notes	MANUAL ONLY

MINI

MORRIS / MINI ALUMINIUM RACING RADIATOR

Core		Header Size	278 x 48
Fin Options	STD	Finish Options	
FPI		Notes	KOYO

MITSUBISHI

ASX XA 1.8ltr Turbo Diesel '10-

Core		Header Size	431 x 63
Fin Options	STD	Finish Options	
FPI	13	Notes	KOYO K-SPORT

ASX XA 1.8ltr Turbo Diesel '10-

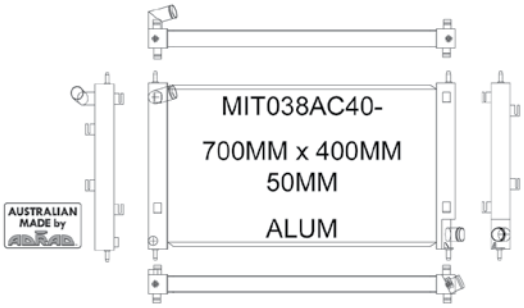

Core		Header Size	433 x 50
Fin Options	STD / SL	Finish Options	Nat / Sat / Low
FPI	18 SL18	Notes	MANUAL ONLY

LANCER EVOLUTION 1 / 2 / 3 '92-96

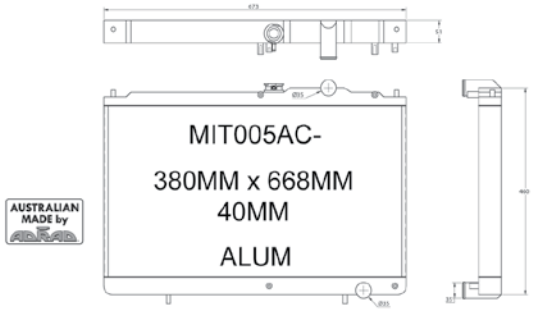

Core		Header Size	673 x 51
Fin Options	STD / SL	Finish Options	Nat / Sat / Low
FPI	18 SL16	Notes	MANUAL ONLY

LANCER EVOLUTION 1 / 2 / 3 '92-96

Core		Header Size	675 x 60
Fin Options	STD	Finish Options	
FPI	13	Notes	KOYO K-SPORT

LANCER EVOLUTION 4 / 5 / 6 '96-01

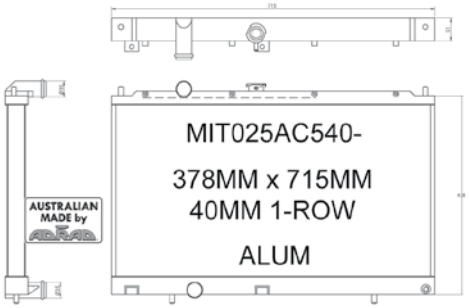

Core		Header Size	715 x 51
Fin Options	STD / SL	Finish Options	Nat / Sat / Low
FPI	16 SL16	Notes	MANUAL ONLY

LANCER EVOLUTION 4 / 5 / 6 '96-01

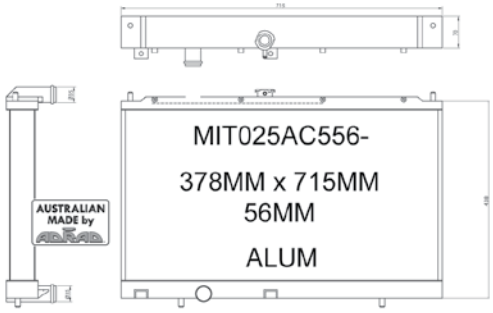

Core		Header Size	715 x 70
Fin Options	STD	Finish Options	Nat / Sat / Low
FPI	14	Notes	MANUAL ONLY

LANCER EVOLUTION 4 / 5 / 6 '96-01

Core		Header Size	713 x 60
Fin Options	STD	Finish Options	
FPI	13	Notes	KOYO K-SPORT

LANCER EVOLUTION 7 / 8 / 9 '02-07

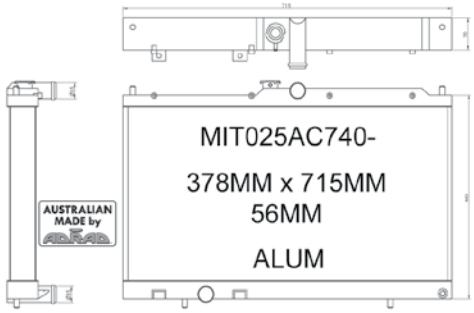

Core			Header Size	715 x 51
Fin Options	STD / SL		Finish Options	Nat / Sat / Low
FPI	18 SL18	Notes	MANUAL ONLY	

LANCER EVOLUTION 7 / 8 / 9 '02-07

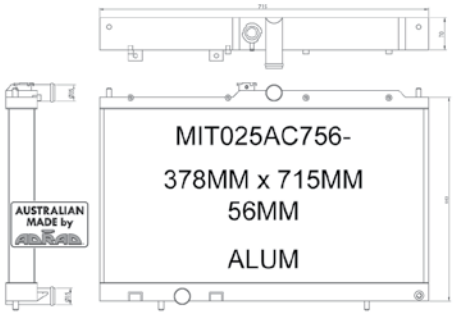

Core			Header Size	715 x 70
Fin Options	STD		Finish Options	Nat / Sat / Low
FPI	18	Notes	MANUAL ONLY	

LANCER EVOLUTION 7 / 8 / 9 '02-07

Core			Header Size	713 x 60
Fin Options	STD		Finish Options	
FPI	13	Notes	KOYO K-SPORT	

LANCER EVOLUTION 10 '08-

Core			Header Size	431 x 63
Fin Options	STD		Finish Options	
FPI	13	Notes	KOYO K-SPORT	

LANCER EVOLUTION 10 '08-

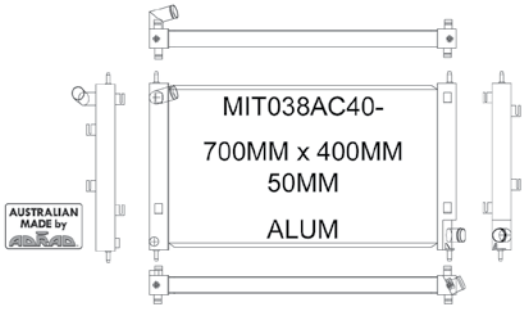

Core			Header Size	433 x 50
Fin Options	STD / SL		Finish Options	Nat / Sat / Low
FPI	18 SL18	Notes	MANUAL ONLY	

OUTLANDER ZG/ZH 3.0ltr '11/06-

Core			Header Size	431 x 63
Fin Options	STD		Finish Options	
FPI	13	Notes	KOYO K-SPORT	

OUTLANDER ZG/ZH 3.0ltr '11/06-

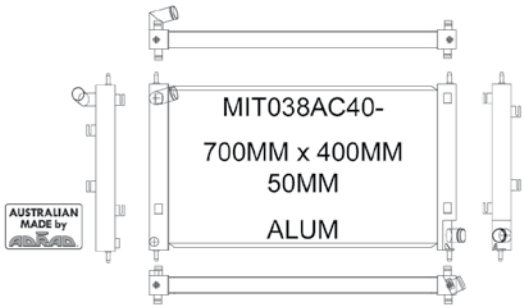

Core			Header Size	433 x 50
Fin Options	STD / SL		Finish Options	Nat / Sat / Low
FPI	18 SL18	Notes	MANUAL ONLY	

Core			Header Size	
Fin Options			Finish Options	
FPI		Notes		

NISSAN

NISSAN

180SX S13 '91-97

Core			Header Size	669 x 60
Fin Options	STD		Finish Options	
FPI	13	Notes	KOYO K-SPORT	

200SX S14/S15 '94-03

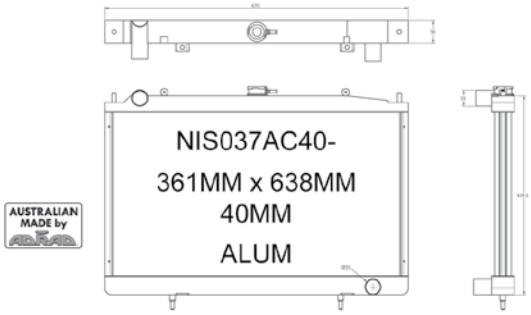

Core			Header Size	670 x 51
Fin Options	STD		Finish Options	Nat / Sat / Low
FPI	18	Notes	MANUAL ONLY	

200SX S14/S15 '94-03

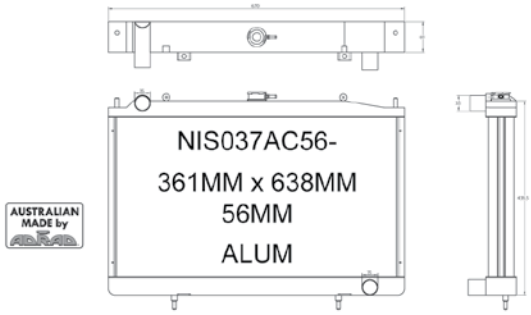

Core			Header Size	670 x 70
Fin Options	STD		Finish Options	Nat / Sat / Low
FPI	18	Notes	MANUAL ONLY	

200SX S14/S15 '94-03

Core			Header Size	669 x 60
Fin Options	STD		Finish Options	
FPI	13	Notes	KOYO K-SPORT	

300ZX Z32 3.0ltr Twin Turbo '89-96

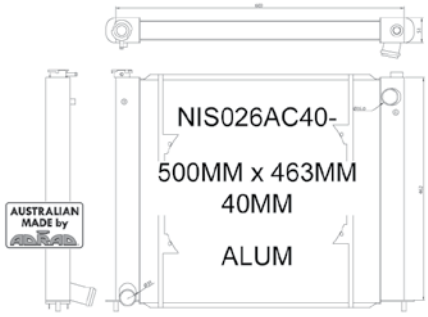

Core			Header Size	468 x 50
Fin Options	STD / SL		Finish Options	Nat / Sat / Low
FPI	18 SL18	Notes	MAN / AUTO AVAILABLE	

300ZX Z32 3.0ltr Twin Turbo '89-96

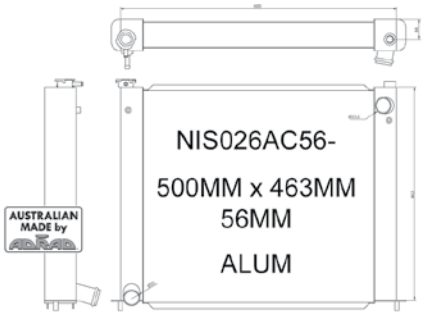

Core			Header Size	469 x 68
Fin Options	STD / SL		Finish Options	Nat / Sat / Low
FPI	16 SL16	Notes	MAN / AUTO AVAILABLE	

300ZX Z32 3.0ltr Twin Turbo '89-96

Core			Header Size	482 x 60
Fin Options	STD		Finish Options	
FPI	13	Notes	KOYO K-SPORT	

350Z Z33 '02-09

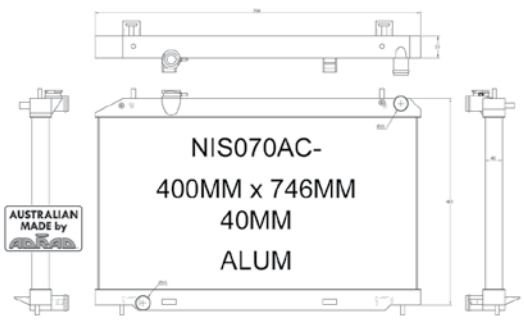

Core			Header Size	760 x 51
Fin Options	STD / SL		Finish Options	Nat / Sat / Low
FPI	18 SL18	Notes	MAN / AUTO AVAILABLE	

350Z Z33 '02-09

Core			Header Size	757 x 60
Fin Options	STD		Finish Options	
FPI	13	Notes	KOYO K-SPORT	

PATROL MQ Petrol '80-87

Core			Header Size	455 x 70
Fin Options	STD / SL		Finish Options	Nat / Sat / Low
FPI	16 SL14	Notes	MAN / AUTO AVAILABLE	

PATROL MQ Diesel '80-87

Core			Header Size	455 x 70
Fin Options	STD / SL		Finish Options	Nat / Sat / Low
FPI	16 SL14	Notes	MAN / AUTO AVAILABLE	

PATROL GQ/GQ II Y60 Petrol '88-97

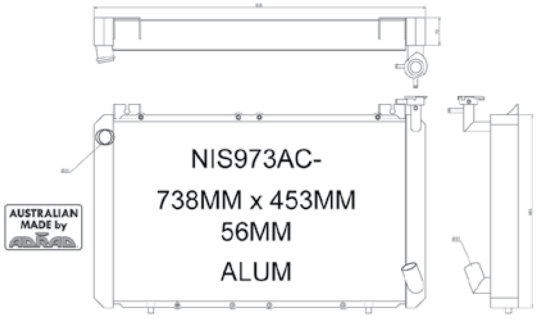

Core			Header Size	490 x 70
Fin Options	STD / SL		Finish Options	Nat / Sat / Low
FPI	18 SL14	Notes	MAN / AUTO AVAILABLE	

PATROL GQ/GQ II Y60 Petrol '88-97 (CHEV MOTOR)

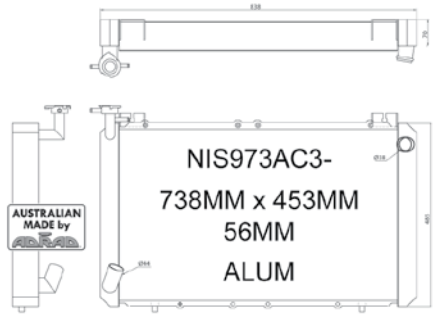

Core			Header Size	485 x 70
Fin Options	STD / SL		Finish Options	Nat / Sat / Low
FPI	14 SL14	Notes	MAN / AUTO AVAILABLE	

PATROL GQ/GQ II Y60 Diesel '88-97

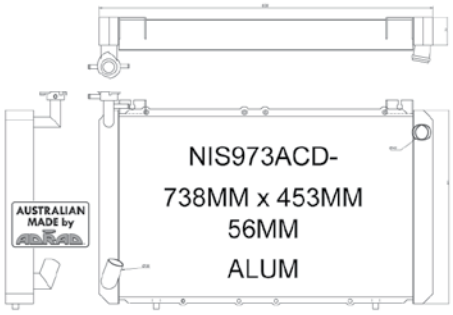

Core			Header Size	485 x 70
Fin Options	STD / SL		Finish Options	Nat / Sat / Low
FPI	14 SL14	Notes	MAN / AUTO AVAILABLE	

PATROL GU Y61 4.5ltr '97-01

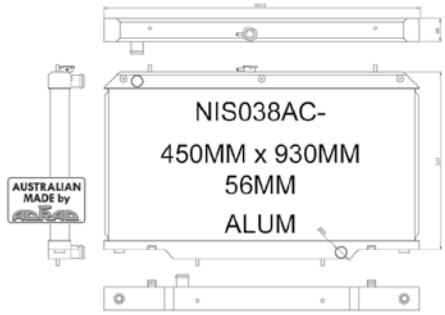

Core			Header Size	935 x 68
Fin Options	STD / SL		Finish Options	Nat / Sat / Low
FPI	18 SL14	Notes	MAN / AUTO AVAILABLE	

PATROL GU Y61 4.2ltr Diesel '97-01

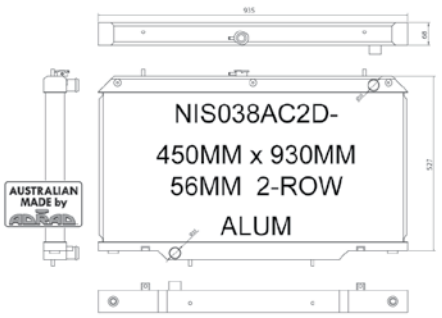

Core			Header Size	935 x 68
Fin Options	STD / SL		Finish Options	Nat / Sat / Low
FPI	18 SL16	Notes	MAN / AUTO AVAILABLE	

PATROL GU Y61 2.8ltr/3.0ltr Turbo Diesel '97-

Core			Header Size	935 x 68
Fin Options	STD / SL		Finish Options	Nat / Sat / Low
FPI	18 SL16	Notes	MAN / AUTO AVAILABLE	

PATROL GU Y61 3/4/5 Y61 4.8ltr '01-

Core			Header Size	597 x 70
Fin Options	STD / SL		Finish Options	Nat / Sat / Low
FPI	18 SL16	Notes	MAN / AUTO AVAILABLE	

PATROL GU Y61 3/4/5 Y61 4.2ltr Turbo Diesel '01-

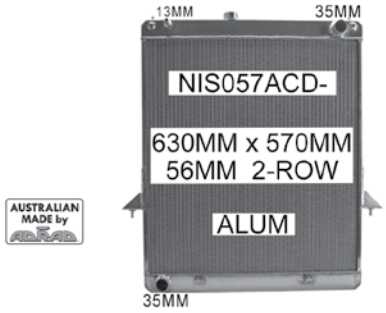

Core			Header Size	597 x 70
Fin Options	STD / SL		Finish Options	Nat / Sat / Low
FPI	18 SL16	Notes	MAN / AUTO AVAILABLE	

PULSAR N14/N15 1.6ltr '91-00

Core			Header Size	669 x 60
Fin Options	STD		Finish Options	
FPI	13	Notes	KOYO K-SPORT	

PULSAR N14/N15 2.0ltr '91-00

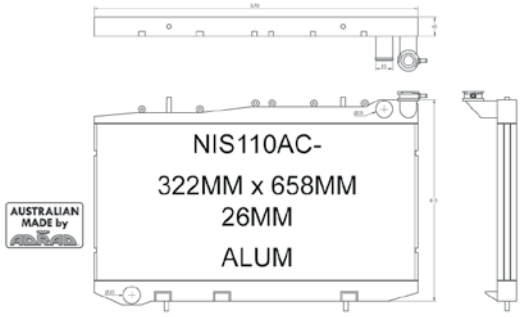

Core			Header Size	670 x 40
Fin Options	STD		Finish Options	Nat / Sat / Low
FPI	18	Notes	MANUAL ONLY	

PULSAR N14/N15 2.0ltr '91-00

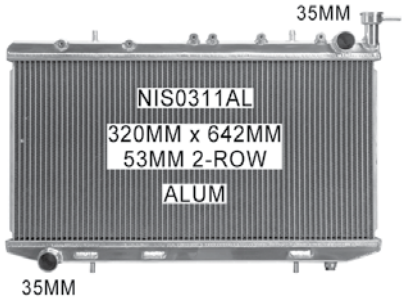

Core			Header Size	667 x 60
Fin Options	STD		Finish Options	
FPI	13	Notes	KOYO K-SPORT	

SILVIA S13 1.8ltr '88-91

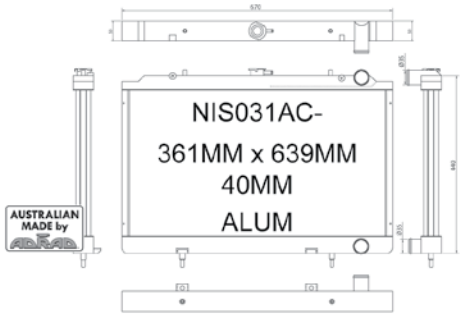

Core			Header Size	670 x 50
Fin Options	STD / SL		Finish Options	Nat / Sat / Low
FPI	18 SL18	Notes	MANUAL ONLY	

SILVIA S13 1.8ltr '88-91

Core		Header Size	669 x 60
Fin Options	STD	Finish Options	
FPI	13	Notes	KOYO K-SPORT

SILVIA S13 2.0ltr '91-93

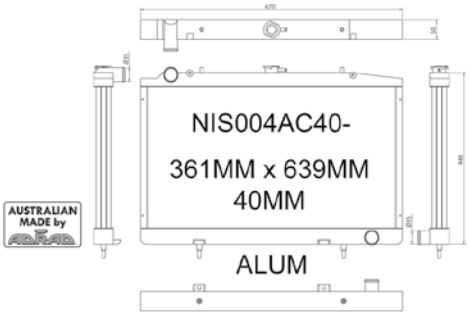

Core		Header Size	670 x 50
Fin Options	STD / SL	Finish Options	Nat / Sat / Low
FPI	18 SL18	Notes	MANUAL ONLY

SILVIA S13 2.0ltr '91-93

Core		Header Size	670 x 70
Fin Options	STD / SL	Finish Options	Nat / Sat / Low
FPI	18 SL16	Notes	MANUAL ONLY

SILVIA S13 2.0ltr '91-93

Core		Header Size	669 x 60
Fin Options	STD	Finish Options	
FPI	13	Notes	KOYO K-SPORT

SILVIA S14 2.0ltr '93-99

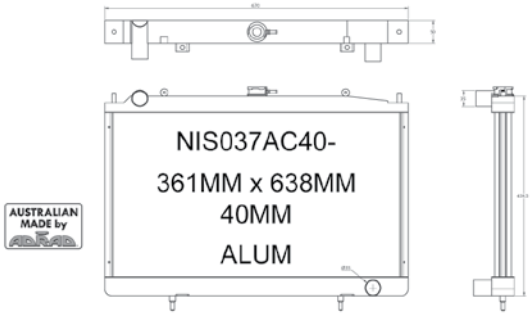

Core		Header Size	670 x 51
Fin Options	STD	Finish Options	Nat / Sat / Low
FPI	18	Notes	MANUAL ONLY

SILVIA S14 2.0ltr '93-99

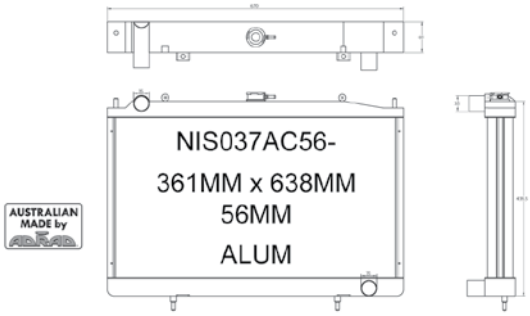

Core		Header Size	670 x 70
Fin Options	STD	Finish Options	Nat / Sat / Low
FPI	18	Notes	MANUAL ONLY

SILVIA S14 2.0ltr '93-99

Core		Header Size	669 x 60
Fin Options	STD	Finish Options	
FPI	13	Notes	KOYO K-SPORT

SKYLINE R31 '86-90

Core		Header Size	670 x 51
Fin Options	STD / SL	Finish Options	Nat / Sat / Low
FPI	18 SL18	Notes	MAN / AUTO AVAILABLE

SKYLINE R31 '86-90

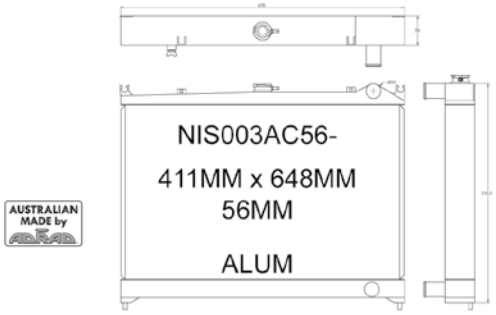

Core		Header Size	670 x 70
Fin Options	STD / SL	Finish Options	Nat / Sat / Low
FPI	16 SL16	Notes	MAN / AUTO AVAILABLE

SKYLINE R32 2.0ltr/2.5ltr '89-94

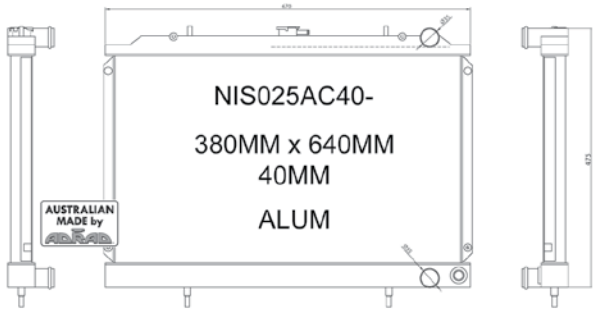

Core		Header Size	670 x 50
Fin Options	STD / SL	Finish Options	Nat / Sat / Low
FPI	18 SL18	Notes	MAN / AUTO AVAILABLE

SKYLINE R32 2.0ltr/2.5ltr '89-94

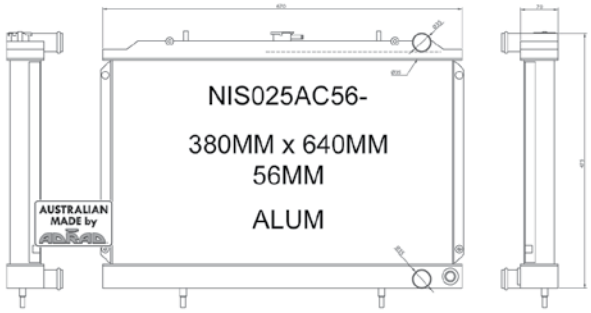

Core		Header Size	670 x 70
Fin Options	STD / SL	Finish Options	Nat / Sat / Low
FPI	18 SL16	Notes	USE THERMO FAN ONLY / MAN / AUTO AVAIL.

SKYLINE R32 2.0ltr/2.5ltr '89-94

Core		Header Size	669 x 60
Fin Options	STD	Finish Options	
FPI	13	Notes	KOYO K-SPORT

SKYLINE R33 2.5ltr '93-98

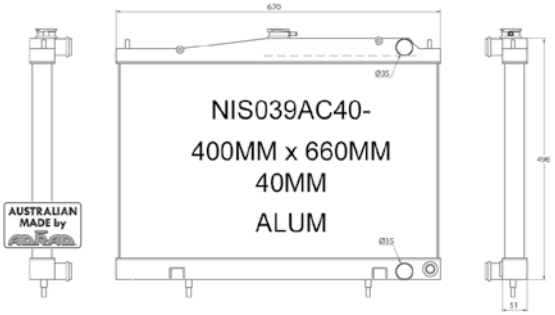

Core		Header Size	670 x 51
Fin Options	STD / SL	Finish Options	Nat / Sat / Low
FPI	18 SL18	Notes	MAN / AUTO AVAILABLE

SKYLINE R33 2.5ltr '93-98

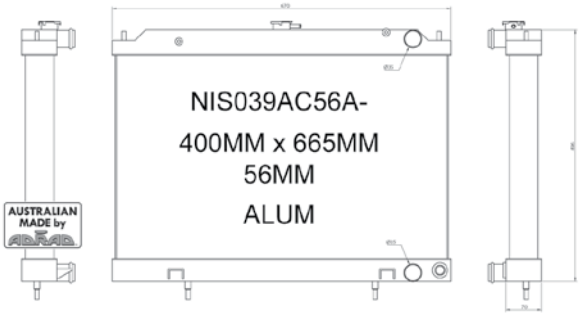

Core		Header Size	670 x 70
Fin Options	STD / SL	Finish Options	Nat / Sat / Low
FPI	18 SL16	Notes	MAN / AUTO AVAILABLE

SKYLINE R33 2.5ltr '93-98

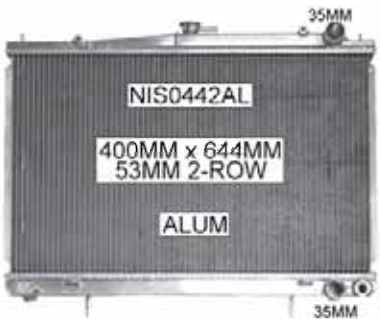

Core		Header Size	669 x 60
Fin Options	STD	Finish Options	
FPI	13	Notes	KOYO K-SPORT

SKYLINE R34 '98-03

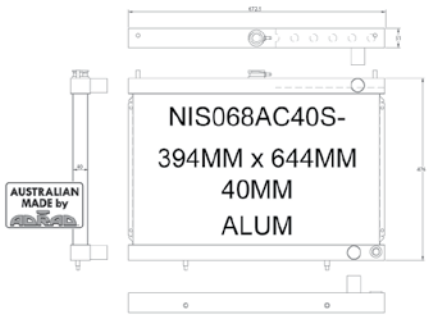

Core		Header Size	670 x 51
Fin Options	STD / SL	Finish Options	Nat / Sat / Low
FPI	18 SL18	Notes	394mm Between Headers / MAN / AUTO AVAIL.

SKYLINE R34 '98-03

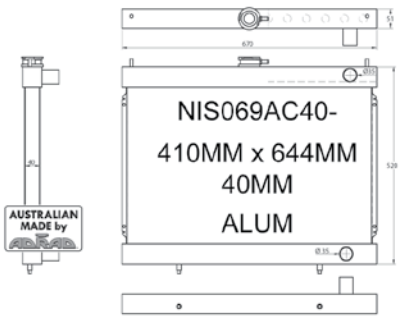

Core		Header Size	670 x 51
Fin Options	STD / SL	Finish Options	Nat / Sat / Low
FPI	18 SL18	Notes	410mm Between Headers / MAN / AUTO AVAIL.

SKYLINE R34 '98-03

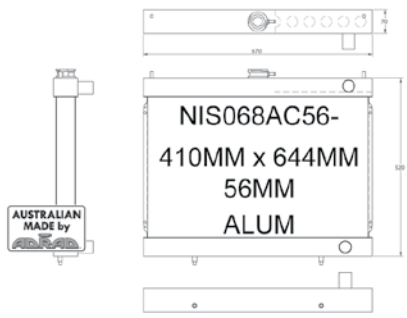

Core		Header Size	670 x 70
Fin Options	STD / SL	Finish Options	Nat / Sat / Low
FPI	18 SL16	Notes	410mm Between Headers / MAN / AUTO AVAIL.

SKYLINE R34 '98-03

Core		Header Size	669 x 60
Fin Options	STD	Finish Options	
FPI	13	Notes	KOYO K-SPORT

SKYLINE R34 GT-R '99-02

Core		Header Size	669 x 60
Fin Options	STD	Finish Options	
FPI	13	Notes	KOYO K-SPORT

SKYLINE V35 350GT '01-07

Core		Header Size	757 x 60/53
Fin Options	STD	Finish Options	
FPI	13	Notes	KOYO K-SPORT

Core		Header Size	
Fin Options		Finish Options	
FPI		Notes	

PORSCHE

928 Auto. '78-95

Core		Header Size	445 x 70
Fin Options	STD / SL	Finish Options	Nat / Sat / Low
FPI	18 SL18	Notes	TWIN OIL COOLERS / AUTO ONLY

PORSCHE

911 996 Centre Module '97-05

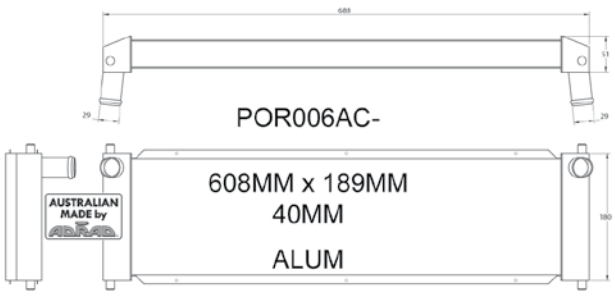

Core			Header Size	180 x 51
Fin Options	STD / SL		Finish Options	Nat / Sat / Low
FPI	18 SL18	Notes	MANUAL ONLY	

911 996 Right / Left Module '97-05

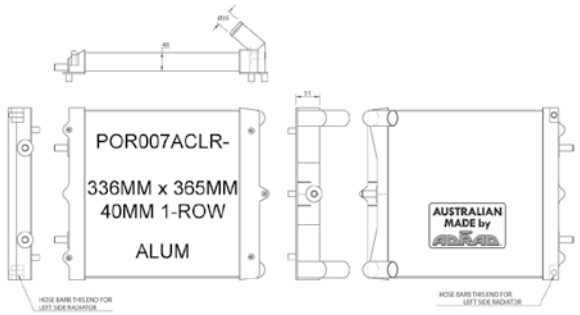

Core			Header Size	375 x 51
Fin Options	STD / SL		Finish Options	Nat / Sat / Low
FPI	18 SL18	Notes	MANUAL ONLY	

SPRINT CAR

SPRINT CAR

SPRINT CAR DOWN FLOW RADIATOR

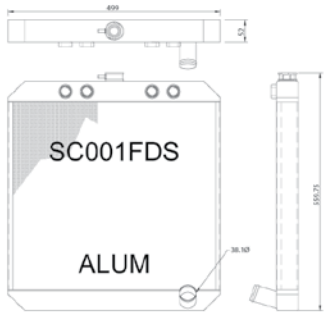

Core			Header Size	498 x 52
Fin Options	STD		Finish Options	Natural
FPI	16	Notes	MANUAL ONLY	

SPRINT CAR CROSS FLOW RADIATOR

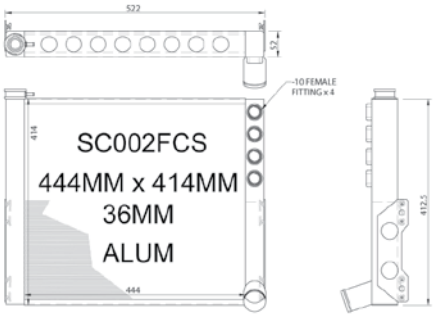

Core			Header Size	411 x 52
Fin Options	STD		Finish Options	Natural
FPI	16	Notes	MANUAL ONLY	

SPRINT CAR CROSS FLOW RADIATOR

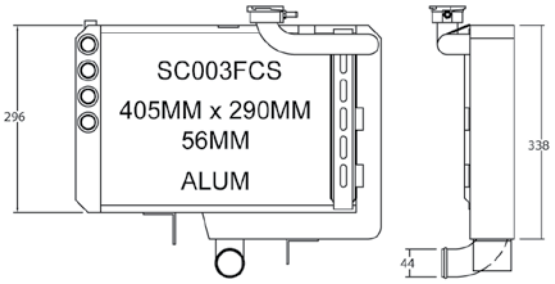

Core			Header Size	296 x 68
Fin Options	STD		Finish Options	Natural
FPI	15	Notes	MANUAL ONLY	

SUBARU

SUBARU

IMPREZA 1.6ltr/1.8ltr '93-98

Core			Header Size	713 x 60
Fin Options	STD		Finish Options	
FPI	13	Notes	KOYO K-SPORT	

IMPREZA '00-8/05

Core			Header Size	712 x 60
Fin Options	STD		Finish Options	
FPI	13	Notes	KOYO K-SPORT	

IMPREZA WRX '94-00

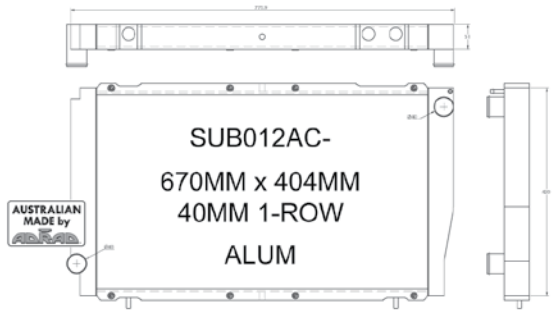

Core			Header Size	417 x 51
Fin Options	STD / SL		Finish Options	Nat / Sat / Low
FPI	16 SL16	Notes	MANUAL ONLY	

IMPREZA WRX '94-00

Core			Header Size	416 x 60
Fin Options	STD		Finish Options	
FPI	13	Notes	KOYO K-SPORT	

IMPREZA WRX '00-9/01

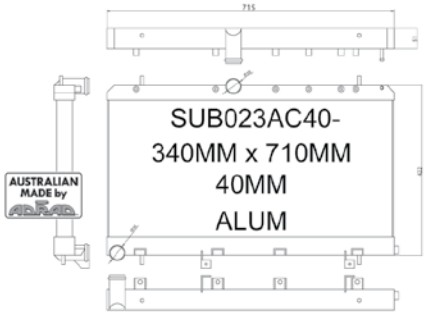

Core			Header Size	715 x 51
Fin Options	STD / SL		Finish Options	Nat / Sat / Low
FPI	18 SL18	Notes	MANUAL ONLY	

IMPREZA WRX '00-9/01

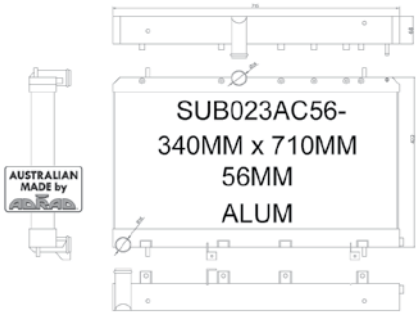

Core			Header Size	715 x 68
Fin Options	STD		Finish Options	Nat / Sat / Low
FPI	18	Notes	MANUAL ONLY	

IMPREZA WRX Hatchback '10/01-7/07

Core			Header Size	712 x 60
Fin Options	STD		Finish Options	
FPI	13	Notes	KOYO K-SPORT	

IMPREZA WRX Hatchback '8/07-

Core			Header Size	713 x 60
Fin Options	STD		Finish Options	
FPI	13	Notes	KOYO K-SPORT	

IMPREZA WRX Sedan '10/01-11/08

Core			Header Size	712 x 60
Fin Options	STD		Finish Options	
FPI	13	Notes	KOYO K-SPORT	

SUBARU

IMPREZA WRX Sedan '12/08-

Core			Header Size	713 x 60
Fin Options	STD		Finish Options	
FPI	13	Notes	KOYO K-SPORT	

LIBERTY 2.0ltr Turbo '91-94

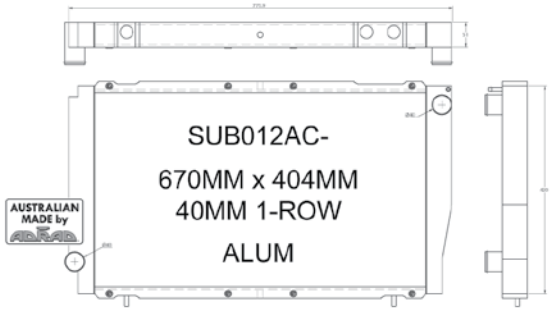

Core			Header Size	417 x 51
Fin Options	STD / SL		Finish Options	Nat / Sat / Low
FPI	16 SL16	Notes	MANUAL ONLY	

LIBERTY 2.0ltr Turbo '91-94

Core			Header Size	416 x 60
Fin Options	STD		Finish Options	
FPI	13	Notes	KOYO K-SPORT	

LIBERTY Turbo '9/03-09

Core			Header Size	713 x 60
Fin Options	STD		Finish Options	
FPI	13	Notes	KOYO K-SPORT	

TOYOTA

TOYOTA

4 RUNNER VZN130R 3.0ltr Petrol '91-96

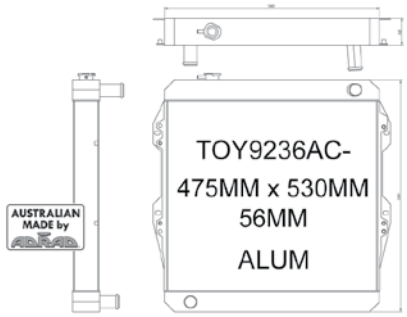

Core			Header Size	540 x 68
Fin Options	STD / SL		Finish Options	Nat / Sat / Low
FPI	18 SL16	Notes	MAN / AUTO AVAILABLE	

4 RUNNER LN130R 2.8ltr Diesel '91-96

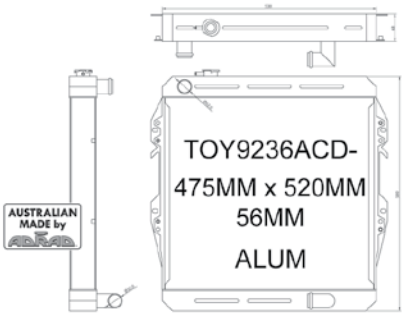

Core			Header Size	530 x 68
Fin Options	STD / SL		Finish Options	Nat / Sat / Low
FPI	18 SL16	Notes	MAN / AUTO AVAILABLE	

CELICA ST204/205 '94-99

Core			Header Size	659 x 60
Fin Options	STD		Finish Options	
FPI	13	Notes	KOYO K-SPORT	

CELICA ZZT231R '99-05

Core			Header Size	342 x 60
Fin Options	STD		Finish Options	
FPI	13	Notes	KOYO K-SPORT	

HILUX LN106/107/111 2.8ltr Diesel '88-97

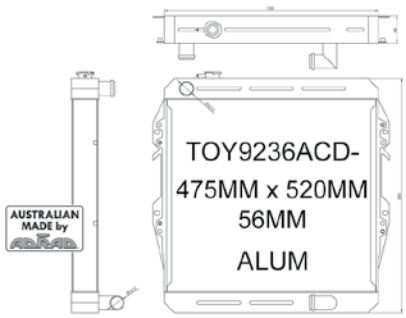

Core			Header Size	530 x 68
Fin Options	STD / SL		Finish Options	Nat / Sat / Low
FPI	18 SL16	Notes	MAN / AUTO AVAILABLE	

HILUX LN 3.0ltr Diesel '97-05

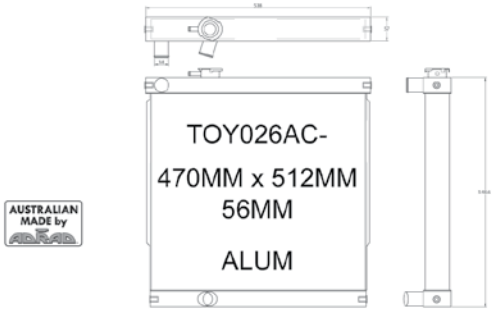

Core			Header Size	538/515 x 67
Fin Options	STD / SL		Finish Options	Nat / Sat / Low
FPI	16 SL16	Notes	MANUAL ONLY	

HILUX SURF Petrol '89-96

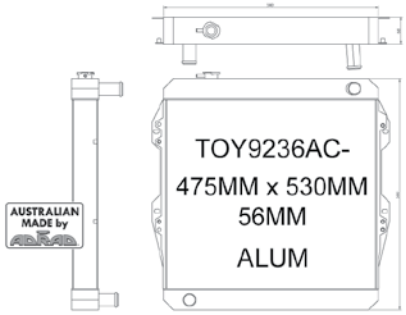

Core			Header Size	540 x 68
Fin Options	STD / SL		Finish Options	Nat / Sat / Low
FPI	18 SL16	Notes	MAN / AUTO AVAILABLE	

LANDCRUISER FJ62 3F Petrol '85-90

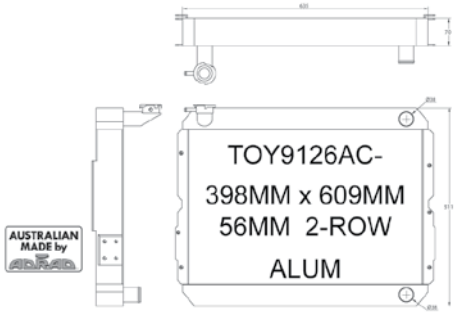

Core			Header Size	635 x 70
Fin Options	STD / SL		Finish Options	Nat / Sat / Low
FPI	18 SL16	Notes	MAN / AUTO AVAILABLE	

LANDCRUISER 70 Series HJ/BJ '85-90

Core			Header Size	535 x 78
Fin Options	STD / SL		Finish Options	Nat / Sat / Low
FPI	18 SL16	Notes	MAN / AUTO AVAILABLE	

LANDCRUISER 70 Series HZJ/PZJ '90-99

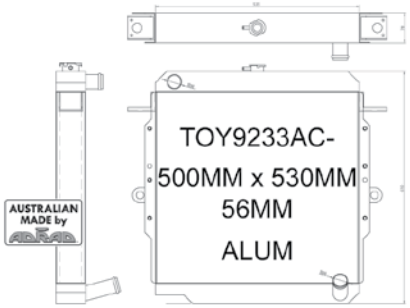

Core			Header Size	535 x 78
Fin Options	STD / SL		Finish Options	Nat / Sat / Low
FPI	18 SL16	Notes	MAN / AUTO AVAILABLE	

LANDCRUISER 70 Series FZJ78/79R '11/99-06

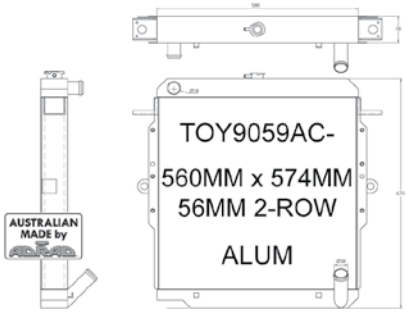

Core			Header Size	535 x 78
Fin Options	STD / SL		Finish Options	Nat / Sat / Low
FPI	16 SL16	Notes	MAN / AUTO AVAILABLE	

LANDCRUISER 80 Series 4.5ltr Petrol '90-98

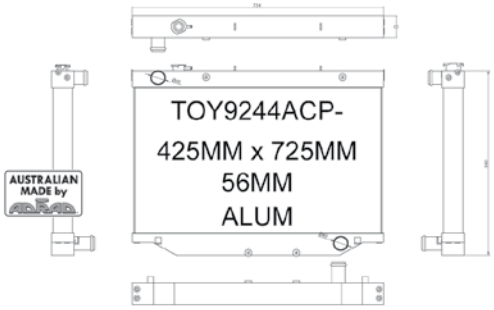

Core			Header Size	734 x 68
Fin Options	STD / SL		Finish Options	Nat / Sat / Low
FPI	16 SL16	Notes	MAN / AUTO AVAILABLE	

LANDCRUISER 80 Series (Universal) 4.0/4.2/4.5ltr Man. '90-98

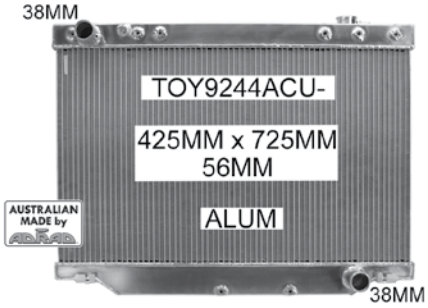

Core			Header Size	734 x 68
Fin Options	STD / SL		Finish Options	Nat / Sat / Low
FPI	16 SL16	Notes	MAN / AUTO AVAILABLE	

LANDCRUISER 100 Series Petrol/Diesel '98-8/02

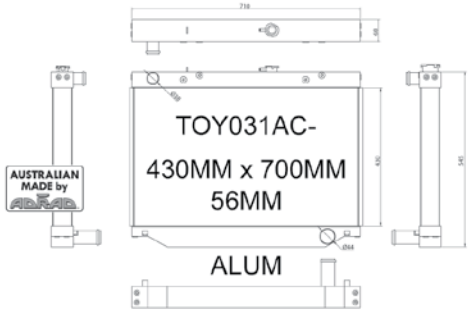

Core			Header Size	710 x 68
Fin Options	STD / SL		Finish Options	Nat / Sat / Low
FPI	18 SL16	Notes	MAN / AUTO AVAILABLE	

LANDCRUISER 100 Series Petrol/Diesel '98-8/02

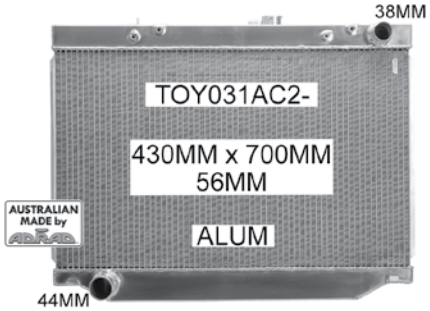

Core			Header Size	710 x 68
Fin Options	STD / SL		Finish Options	Nat / Sat / Low
FPI	18 SL16	Notes	MAN / AUTO AVAILABLE	

LANDCRUISER 200 Ser Auto '07- VDJ200R Diesel

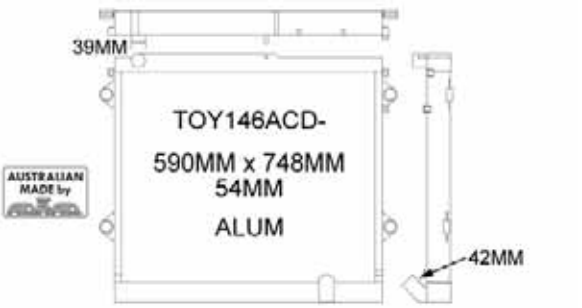

Core			Header Size	754 x 68
Fin Options	SL		Finish Options	SATIN
FPI	SL 14	Notes	MAN / AUTO AVAILABLE	

MR2 ZZW30R 1.8ltr '00-05

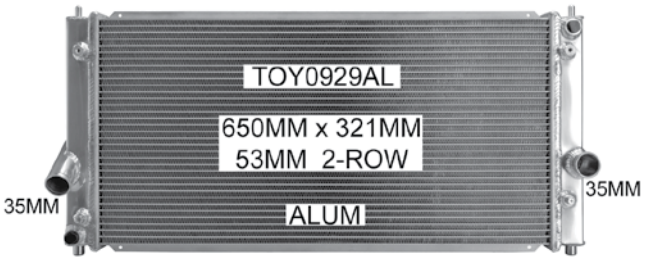

Core			Header Size	342 x 60
Fin Options	STD		Finish Options	
FPI	13	Notes	KOYO K-SPORT	

SOARER 4.0ltr '90-98

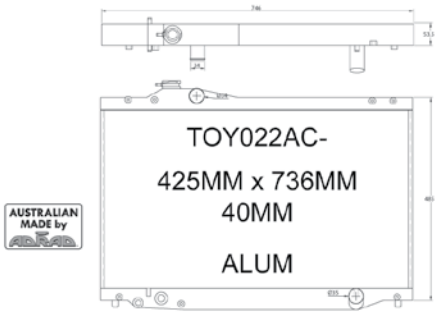

Core			Header Size	746 x 51
Fin Options	STD / SL		Finish Options	Nat / Sat / Low
FPI	18 SL16	Notes	MAN / AUTO AVAILABLE	

SPRINTER AE86 '83-85

Core			Header Size	587 x 60
Fin Options	STD		Finish Options	
FPI	13	Notes	KOYO K-SPORT	

TOYOTA

SUPRA MA70/71 3.0ltr '86-92

Core			Header Size	659 X 60
Fin Options	STD		Finish Options	
FPI	13	Notes	KOYO K-SPORT	

SUPRA MA70/71 3.0ltr '86-92

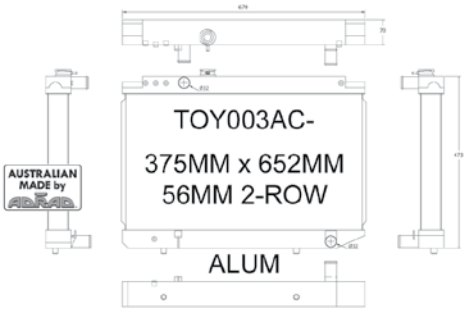

Core			Header Size	670 x 70
Fin Options	STD / SL		Finish Options	Nat / Sat / Low
FPI	14 SL14	Notes	MAN / AUTO AVAILABLE	

SUPRA JZA80 '93-02

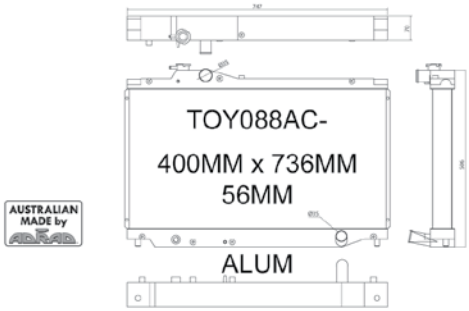

Core			Header Size	748 x 70
Fin Options	STD / SL		Finish Options	Nat / Sat / Low
FPI	16 SL16	Notes	MAN / AUTO AVAILABLE	

SUPRA JZA80 '93-02

Core			Header Size	754 x 60
Fin Options	STD		Finish Options	
FPI	13	Notes	KOYO K-SPORT	

UNIVERSAL

UNIVERSAL

UNIVERSAL CHEV TYPE

Core			Header Size	460 x 72
Fin Options	STD		Finish Options	
FPI	13	Notes	MANUAL ONLY	

UNIVERSAL CHEV TYPE

Core			Header Size	460 x 72
Fin Options	STD		Finish Options	
FPI	13	Notes	MANUAL ONLY	

UNIVERSAL CHEV TYPE

Core			Header Size	460 x 72
Fin Options	STD		Finish Options	
FPI	13	Notes	MANUAL ONLY	

UNIVERSAL

UNIVERSAL CHEV TYPE

Core		Header Size	460 x 72
Fin Options	STD	Finish Options	
FPI	13	Notes	MANUAL ONLY

UNIVERSAL FORD TYPE

Core		Header Size	460 x 72
Fin Options	STD	Finish Options	
FPI	13	Notes	MANUAL ONLY

UNIVERSAL FORD TYPE

Core		Header Size	460 x 72
Fin Options	STD	Finish Options	
FPI	13	Notes	MANUAL ONLY

UNIVERSAL FORD TYPE

Core		Header Size	460 x 72
Fin Options	STD	Finish Options	
FPI	13	Notes	MANUAL ONLY

UNIVERSAL FORD TYPE

Core		Header Size	460 x 72
Fin Options	STD	Finish Options	
FPI	13	Notes	MANUAL ONLY

Core		Header Size	
Fin Options		Finish Options	
FPI		Notes	

VAN DIEMEN

VAN DIEMEN

VAN DIEMEN '00-02

Core	VD02A	Header Size	200 x 92/67
Fin Options	STD	Finish Options	Natural
FPI	16	Notes	MANUAL ONLY

VAN DIEMEN RF94

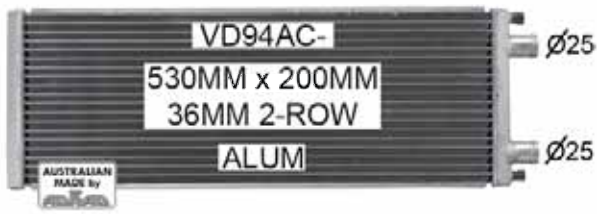

Core	VD94A		**Header Size**	200 x 45
Fin Options	STD		**Finish Options**	Natural
FPI	16	Notes	MANUAL ONLY	

Core			Header Size	
Fin Options			Finish Options	
FPI		Notes		

NEED A SPECIAL OR CUSTOMISED PART?

CALL YOUR LOCAL BRANCH
OR EMAIL SALES@ADRAD.COM.AU

AUSTRALIA TOLL FREE 1800 882 043
NEW ZEALAND TOLL FREE 0800 628 723

ADRAD RADIATORS

PERFORMANCE COOLING

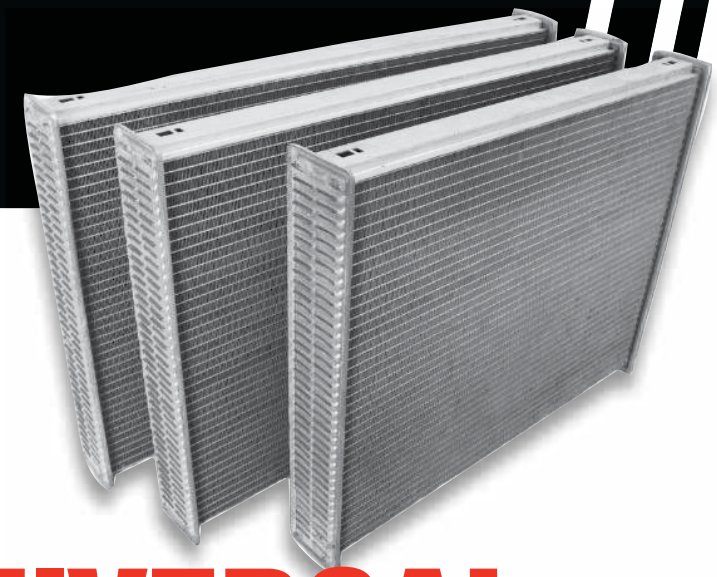

UNIVERSAL PERFORMANCE RADIATOR CORES

Universal Performance Radiator Cores

Representative Image Only

Part No.	FD9149A	**Core Size**	440 X 603 X 56	**FPI**	14
Header Plates	610 X 76	**Headers**	Flat		
Notes	OVERALL WIDTH 649MM. Suits XW/XY Refer p21				

Representative Image Only

Part No.	HOL001A	**Core Size**	540 X 427 X 56	**FPI**	18
Header Plates	445 X 78	**Headers**	Flat		
Notes	OVERALL WIDTH 455MM. Suits VP/VS Refer p25				

Representative Image Only

Part No.	HOL009A	**Core Size**	672 X 427 X 56	**FPI**	18
Header Plates	438 X 70	**Headers**	Flat		
Notes	OVERALL WIDTH 433MM. Suits VX/VU Refer p25				

Representative Image Only

Part No.	HOL954A	**Core Size**	368 X 625 X 56	**FPI**	14
Header Plates	642 X 70	**Headers**	Flat		
Notes	OVERALL WIDTH 631MM. Suits HQ/HZ Refer p26, 27				

Representative Image Only

Part No.	HOL954ATU	**Core Size**	368 X 625 X 56	**FPI**	14
Header Plates	642 X 70	**Headers**	Flanged - 10mm turn up		
Notes	Suits HQ/HZ, Torana LH/LX Refer p26,27				

Representative Image Only

Part No.	HOL969A	**Core Size**	540 X 427 X 56	**FPI**	18
Header Plates	445 X 78	**Headers**	Flat		
Notes	OVERALL WIDTH 455MM. Suits VB/VK Refer p24				

Representative Image Only

Part No.	HOL990A	**Core Size**	620 X 438 X 56	**FPI**	18
Header Plates	445 X 78	**Headers**	Flat		
Notes	OVERALL WIDTH 472MM. Suits WB V8 Refer p26, 27				

These Universal Cores are ideal for making custom fabricated radiators.

For other sizes, please contact Adrad with your specifications.

ADRAD RADIATORS

PERFORMANCE COOLING

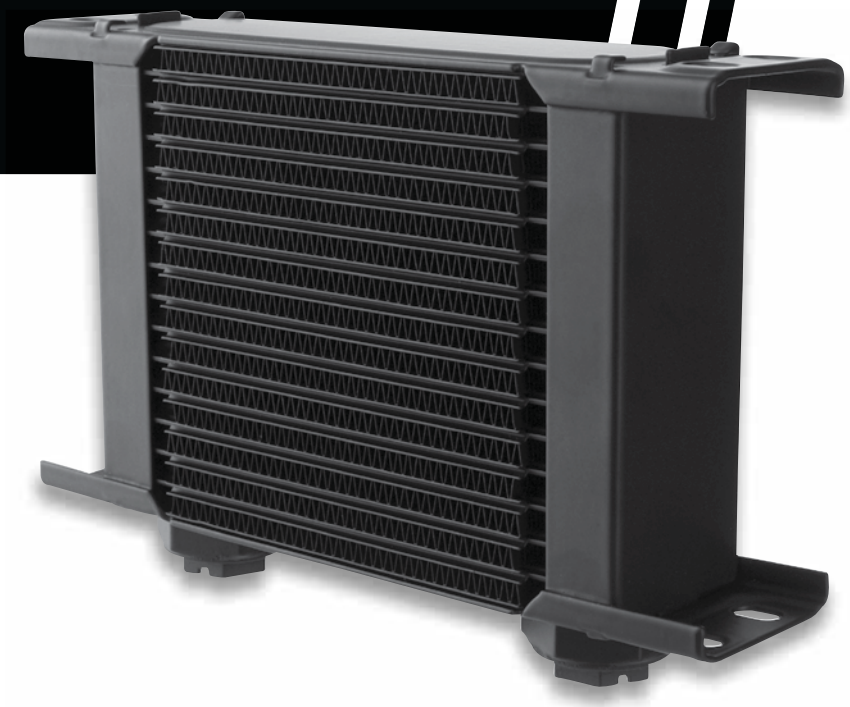

OIL COOLERS

RX-2 / RX-7 ENGINE OIL COOLER

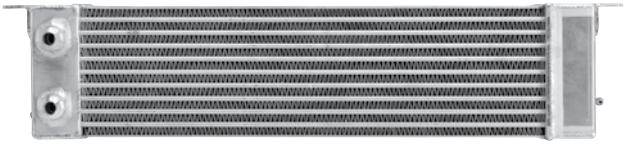

Part No.	EOC101	Size	550 X 133 X 70	Plates	9
Notes	DASH 10 MALE FITTINGS				

PORSCHE 911 '78 w / RSR BAR OIL COOLER ASSY

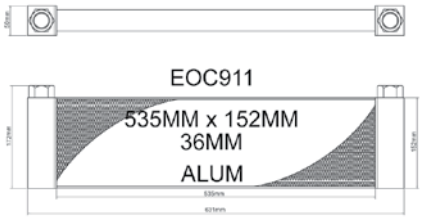

Part No.	EOC911	Size	535 X 152 X 36	Plates	11
Notes	3/4 BSP FEMALE FITTINGS				

UNIVERSAL OIL COOLER KIT - SMALL

Part No.	TC684	Size	152 X 100 X 19	Plates	28
Notes	10MM HOSE BARB FITTINGS				

UNIVERSAL OIL COOLER KIT - SMALLUP TO 2 Ltr.

Part No.	TC685	Size	100 X 283 X 23	Plates	18
Notes	8MM HOSE BARB FITTINGS				

UNIVERSAL OIL COOLER KIT - MEDIUM2 TO 4 Ltr.

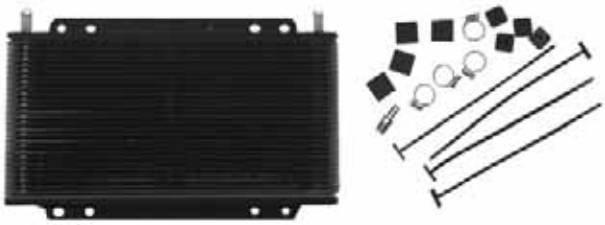

Part No.	TC686	Size	145 X 280 X 20	Plates	27
Notes	8MM HOSE BARB FITTINGS				

UNIVERSAL 6 CYL APPLICATIONS

Part No.	TC677	Size	150 X 280 X 20	Plates	24
Notes	3/8" HOSE BARB FITTINGS				

HOLDEN COMMODOREVS SERIES I

Part No.	TC689	Size	165 X 280 X 19	Plates	20
Notes	3/8" INVERTED FITTINGS				

TOYOTA CAMRY OIL COOLER KIT

Part No.	TC683	Size	184 X 280 X 19	Plates	36
Notes	3/8" HOSE BARB FITTINGS				

UNIVERSAL OIL COOLER KIT - LARGE4 Ltr. UPWARDS

Part No.	TC687	Size	188 X 280 X 20	Plates	36
Notes	10MM HOSE BARB FITTINGS				

FORD FALCON XD-EA, 6 & 8 CYL3 SPEED AUTO OIL COOLER KIT

Part No.	TC679	Size	190 X 280 X 20	Plates	36
Notes	5/16" HOSE BARB FITTINGS				

UNIVERSAL 8 CYL APPLICATIONS

Part No.	TC678	**Size**	197 X 280 X 20	**Plates**	23
Notes	3/8" HOSE BARB FITTINGS				

STACKED PLATE OIL COOLER

Part No.	TC695	**Size**	66 X 125 X 32	**Plates**	4
Notes	9/16 x 18 (M Dash 6) Fittings				

STACKED PLATE OIL COOLER

Part No.	TC690	**Size**	80 X 125 X 32	**Plates**	5
Notes	M10 X 1.25 Female Fittings				

STACKED PLATE OIL COOLER

Part No.	TC696	**Size**	94 X 125 X 32	**Plates**	6
Notes	9/16 x 18 (M Dash 6) Fittings				

STACKED PLATE OIL COOLER

Part No.	TC703	**Size**	75 X 226 X 32	**Plates**	6
Notes	9/16 x 18 (M Dash 6) Fittings				

STACKED PLATE OIL COOLER

Part No.	TC697	**Size**	94 X 201 X 32	**Plates**	6
Notes	9/16 x 18 (M Dash 6) Fittings				

STACKED PLATE OIL COOLER

Part No.	TC700	**Size**	103 X 226 X 32	**Plates**	8
Notes	9/16 x 18 (M Dash 6) Fittings				

STACKED PLATE OIL COOLER

Part No.	TC704	**Size**	131 X 226 X 32	**Plates**	10
Notes	3/4 x 16 (M Dash 8) Fittings				

STACKED PLATE OIL COOLER

Part No.	TC701	**Size**	159 X 226 X 32	**Plates**	12
Notes	3/4 x 16 (M Dash 8) Fittings				

STACKED PLATE OIL COOLER

Part No.	TC698	**Size**	164 X 201 X 32	**Plates**	11
Notes	9/16 x 18 (M Dash 6) Fittings				

STACKED PLATE OIL COOLER

Part No.	TC702	**Size**	215 X 226 X 32	**Plates**	16
Notes	3/4 x 16 (M Dash 8) Fittings				

STACKED PLATE OIL COOLER

Part No.	TC699	**Size**	248 X 201 X 32	**Plates**	16
Notes	3/4 x 16 (M Dash 8) Fittings				

MEDIUM 6CYL UNIVERSAL ENGINE OILCOOLER CORE

Part No.	EOC001	**Size**	146 X 280 X 38	**Plates**	24
Notes	REQUIRES 3/8" OR 1/2" FITTINGS				

HOLDEN COMMODOREVS SERIES II

Part No.	TC676	**Size**	165 X 280 X 38	**Plates**	28
Notes	FEMALE FLARE FITTINGS				

STACKED PLATE OIL COOLER

Part No.	TC705	**Size**	174 X 230 X 48	**Plates**	13
Notes	7/8 x 14 (M Dash 10) Fittings				

STACKED PLATE OIL COOLER

Part No.	TC706	**Size**	216 X 230 X 48	**Plates**	16
Notes	7/8 x 14 (M Dash 10) Fittings				

STACKED PLATE OIL COOLER

Part No.	TC691	**Size**	219 X 230 X 48	**Plates**	17
Notes	1-1/16 (12UNF) Fittings				

FALCON BA/BF 4.0ltr '02-TERRITORY SX/S Y 4.0ltr '04-

Part No.	TC707	**Size**		**Plates**	
Notes	EXTERNAL OIL COOLER -TOW				

FALCON BA/BF Turbo '02-TERRITORY SX/SY Turbo '04-

Part No.	TC708	**Size**		**Plates**	
Notes	EXTERNAL OIL COOLER				

Part No.		Size		Plates	
Notes					

OIL COOLERS BY SETRAB

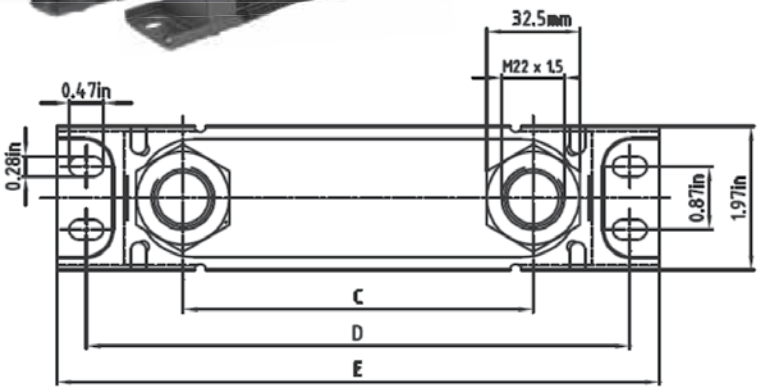

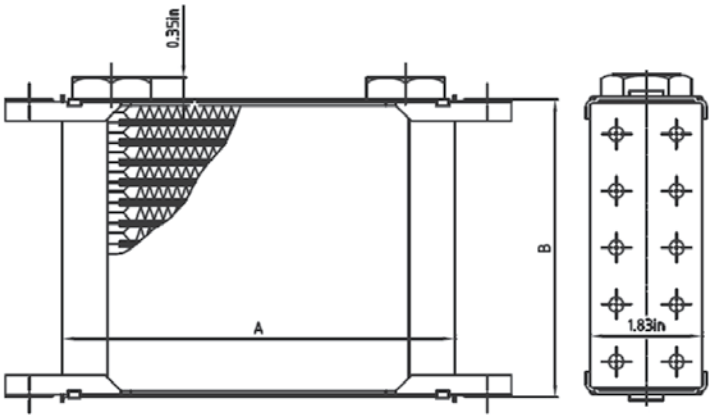

SETRAB STANDARD COOLERS					
PART NUMBER	DIMENSIONS				
	A	B	C	D	E
SETRAB107	163	53	122	190	210
SETRAB110	163	76	122	190	210
SETRAB113	163	100	122	190	210
SETRAB116	163	122	122	190	210
SETRAB119	163	146	122	190	210
SETRAB125	163	193	122	190	210
SETRAB150	163	389	122	190	210
SETRAB172	163	562	122	190	210
SETRAB607	283	53	242	310	330
SETRAB610	283	76	242	310	330
SETRAB613	283	100	242	310	330
SETRAB616	283	122	242	310	330
SETRAB619	283	146	242	310	330
SETRAB625	283	193	242	310	330
SETRAB634	283	264	242	310	330
SETRAB640	283	310	242	310	330
SETRAB650	283	389	242	310	330
SETRAB910	358	76	317	385	405
SETRAB915	358	115	317	385	405
SETRAB919	358	146	317	385	405
SETRAB925	358	193	317	385	405

SETRAB THREADED ADAPTORS	
SETRABAN6	AN6 ADAPTOR
SETRABAN8	AN8 ADAPTOR
SETRABAN10	AN10 AD APTOR
SETRABAN12	AN12 ADAPTOR

NOT SURE WHICH PART YOU NEED?

CALL YOUR LOCAL BRANCH OR EMAIL SALES@ADRAD.COM.AU

AUSTRALIA TOLL FREE 1800 882 043
NEW ZEALAND TOLL FREE 0800 628 723

ADRAD RADIATORS

PERFORMANCE COOLING

RADIATOR CAPS & FILLER NECKS

RECOVERY PRESSURE CAP

Part No.	RC3109	Filler Neck Size	31MM
Pressure	13PSI	Type	JAP SIZE
Notes	SHORT NECK DEPTH		

RECOVERY PRESSURE CAP

Part No.	RC3109B	Filler Neck Size	31MM
Pressure	13PSI	Type	JAP SIZE
Notes	ZINC PLATED / SHORT NECK DEPTH		

LEVER CAP

Part No.	RC90PR	Filler Neck Size	31MM
Pressure	13PSI	Type	JAP SIZE
Notes			

LEVER CAP BRASS PIN

Part No.	RCBP13JAPPR	Filler Neck Size	31MM
Pressure	13PSI	Type	JAP SIZE
Notes	SUITABLE FOR SAFETY APPLICATIONS		

RECOVERY PRESSURE CAP

Part No.	ZCAPSTEPPED	Filler Neck Size	31MM
Pressure	13PSI	Type	JAP SIZE
Notes			

DENSO RADIATOR CAP (SMALL)

Part No.	560-90N	Filler Neck Size	31MM
Pressure	13PSI	Type	JAP SIZE
Notes	DENSO		

RECOVERY CAP - CPC

Part No.	PC58090	Filler Neck Size	31MM
Pressure	13PSI	Type	JAP SIZE
Notes	EXTRA SHORT NECK DEPTH		

RECOVERY PRESSURE CAP

Part No.	RC3111	Filler Neck Size	31MM
Pressure	15PSI	Type	JAP SIZE
Notes	SHORT NECK DEPTH		

LEVER CAP BRASS PIN

Part No.	RCBP16JAPPR	Filler Neck Size	31MM
Pressure	16PSI	Type	JAP SIZE
Notes	SUITABLE FOR SAFETY APPLICATIONS		

RECOVERY PRESSURE CAP

Part No.	ZCAPSTEPPED1.1	Filler Neck Size	31MM
Pressure	16PSI	Type	JAP SIZE
Notes			

Radiator Caps and Filler Necks

RECOVERY CAP - CPC

Part No.	PC562110	Filler Neck Size	31MM
Pressure	16PSI	Type	JAP SIZE
Notes	SHORT NECK DEPTH		

LEVER RELEASE CAP - CPC (PC560110) Toyota LandCruiser/Hilux

Part No.	PC56516	Filler Neck Size	31MM
Pressure	16PSI	Type	JAP SIZE
Notes	SHORT NECK DEPTH		

RECOVERY CAP - CPC

Part No.	PC582110	Filler Neck Size	31MM
Pressure	16PSI	Type	JAP SIZE
Notes	EXTRA SHORT NECK DEPTH		

BLANKING CAP SMALL TYPE

Part No.	PC2000	Filler Neck Size	31MM
Pressure	N/A	Type	JAP SIZE
Notes	SMALL NECK TYPE		

LEVER CAP BRASS PIN

Part No.	RCBP10PR	Filler Neck Size	41MM
Pressure	10PSI	Type	STANDARD SIZE
Notes	SUITABLE FOR SAFETY APPLICATIONS		

PRESSURE CAP - CPC

Part No.	PC51410	Filler Neck Size	41MM
Pressure	10PSI	Type	STANDARD SIZE
Notes	SHORT NECK DEPTH		

PRESSURE CAP - CPC

Part No.	PC51510	Filler Neck Size	41MM
Pressure	10PSI	Type	STANDARD SIZE
Notes	LONG NECK DEPTH		

RECOVERY CAP - CPC same as PC51410 but Recovery

Part No.	PC54510	Filler Neck Size	41MM
Pressure	10PSI	Type	STANDARD SIZE
Notes	SHORT NECK DEPTH		

RECOVERY PRESSURE CAP

Part No.	RC4109	Filler Neck Size	41MM
Pressure	13PSI	Type	STANDARD SIZE
Notes	SHORT NECK DEPTH		

LEVER CAP BRASS PIN

Part No.	RCBP13PR	Filler Neck Size	41MM
Pressure	13PSI	Type	STANDARD SIZE
Notes	SUITABLE FOR SAFETY APPLICATIONS		

RADIATOR CAP LGE (CAP0870)

Part No.	543-13N	Filler Neck Size	41MM
Pressure	13PSI	Type	STANDARD SIZE
Notes	DENSO		

PRESSURE CAP - CPC

Part No.	PC50813	Filler Neck Size	41MM
Pressure	13PSI	Type	STANDARD SIZE
Notes	SHORT NECK DEPTH		

PRESSURE CAP - CPC

Part No.	PC51713	Filler Neck Size	41MM
Pressure	13PSI	Type	STANDARD SIZE
Notes	LONG NECK DEPTH		

RECOVERY CAP - CPC

Part No.	PC54313	Filler Neck Size	41MM
Pressure	13PSI	Type	STANDARD SIZE
Notes	SHORT NECK DEPTH		

LEVER RELEASE CAP - CPC

Part No.	PC57513PR	Filler Neck Size	41MM
Pressure	13PSI	Type	STANDARD SIZE
Notes	SHORT NECK DEPTH		

LEVER CAP

Part No.	RC1314PR	Filler Neck Size	41MM
Pressure	14PSI	Type	STANDARD SIZE
Notes			

PRESSURE CAP - CPC

Part No.	PC51314	Filler Neck Size	41MM
Pressure	14PSI	Type	STANDARD SIZE
Notes	SHORT NECK DEPTH		

RECOVERY PRESSURE CAP

Part No.	RC4111B	Filler Neck Size	41MM
Pressure	15/16PSI	Type	STANDARD SIZE
Notes	ZINC PLATED / SHORT NECK DEPTH		

PRESSURE CAP - CPC

Part No.	PC51815	Filler Neck Size	41MM
Pressure	15PSI	Type	STANDARD SIZE
Notes	SHORT NECK DEPTH		

RECOVERY CAP - CPC

Part No.	PC53415	Filler Neck Size	41MM
Pressure	15PSI	Type	STANDARD SIZE
Notes	SHORT NECK DEPTH		

RECOVERY PRESSURE CAP

Part No.	RC4111	Filler Neck Size	41MM
Pressure	16PSI	Type	STANDARD SIZE
Notes	SHORT NECK DEPTH		

LEVER CAP

Part No.	RC1516PR	Filler Neck Size	41MM
Pressure	16PSI	Type	STANDARD SIZE
Notes			

LEVER CAP BRASS PIN

Part No.	RCBP16PR	Filler Neck Size	41MM
Pressure	16PSI	Type	STANDARD SIZE
Notes	SUITABLE FOR SAFETY APPLICATIONS		

PRESSURE CAP - CPC

Part No.	PC53116	Filler Neck Size	41MM
Pressure	16PSI	Type	STANDARD SIZE
Notes	SHORT NECK DEPTH		

RECOVERY CAP - CPC

Part No.	PC53216	Filler Neck Size	41MM
Pressure	16PSI	Type	STANDARD SIZE
Notes	SHORT NECK DEPTH		

LEVER RELEASE CAP - CPC

Part No.	PC57516PR	Filler Neck Size	41MM
Pressure	16PSI	Type	STANDARD SIZE
Notes	SHORT NECK DEPTH		

PRESSURE CAP - CPC VZ COMMODORE V8

Part No.	PC550120	Filler Neck Size	41MM
Pressure	17PSI	Type	STANDARD SIZE
Notes	SHORT NECK DEPTH		

RECOVERY PRESSURE CAP

Part No.	RC4114	Filler Neck Size	41MM
Pressure	20PSI	Type	STANDARD SIZE
Notes	SHORT NECK DEPTH		

PRESSURE CAP - CPC Ford 6/V8 EB to EL, AU

Part No.	PC52220	Filler Neck Size	41MM
Pressure	20PSI	Type	STANDARD SIZE
Notes	SHORT NECK DEPTH		

RECOVERY CAP - CPC Holden V6 VN>VY / Ford AU 6 V

Part No.	PC53820	Filler Neck Size	41MM
Pressure	20PSI	Type	STANDARD SIZE
Notes	SHORT NECK DEPTH		

Radiator Caps and Filler Necks

LEVER CAP

Part No.	RC22PR	Filler Neck Size	41MM
Pressure	22PSI	Type	STANDARD SIZE
Notes			

LEVER CAP

Part No.	RC7PR	Filler Neck Size	41MM
Pressure	7PSI	Type	STANDARD SIZE
Notes			

LEVER CAP BRASS PIN

Part No.	RCBP7PR	Filler Neck Size	41MM
Pressure	7PSI	Type	STANDARD SIZE
Notes	SUITABLE FOR SAFETY APPLICATIONS		

BLANKING CAP non presure

Part No.	PC2001	Filler Neck Size	41MM
Pressure	N/A	Type	STANDARD SIZE
Notes	STANDARD NECK TYPE		

PRESSURE CAP - CPC Holden V8 VT VX gen3/V6 V8 VY

Part No.	PC575100	Filler Neck Size	
Pressure	15PSI	Type	
Notes	BOTTLE TYPE - INTERNAL THREAD		

SCREW CAP - PLASTIC - CPC Ford EA Falcon

Part No.	PC570110	Filler Neck Size	
Pressure	16PSI	Type	
Notes	BOTTLE TYPE - INTERNAL THREAD		

SCREW CAP - RECOVERY - CPC Holden VZ V6

Part No.	PC570120	Filler Neck Size	
Pressure	17PSI	Type	
Notes	BOTTLE TYPE - INTERNAL THREAD		

SCREW CAP - PLASTIC - CPC Ford BA BF / Territory 6+V8

Part No.	PC571120	Filler Neck Size	
Pressure	17PSI	Type	
Notes	BOTTLE TYPE - INTERNAL THREAD		

PRESSURE CAP - CPC BMW

Part No.	PC574115	Filler Neck Size	
Pressure	17PSI	Type	
Notes	BOTTLE TYPE - INTERNAL THREAD		

PRESSURE CAP - CPC FOCUS / FIESTA / ASTRA AH

Part No.	PC575120	Filler Neck Size	
Pressure	17PSI	Type	
Notes	BOTTLE TYPE - INTERNAL THREAD		

SURGE CAP - PLASTIC - CPC Holden VN

Part No.	PC572135	Filler Neck Size	
Pressure	20PSI	Type	
Notes	BOTTLE TYPE - INTERNAL THREAD		

PRESSURE CAP - CPC BMW / RANGE ROVER

Part No.	PC574200	Filler Neck Size	
Pressure	29PSI	Type	
Notes	BOTTLE TYPE - INTERNAL THREAD		

FILLER NECKS

PRESSED ALUMINIUM FILLER NECK

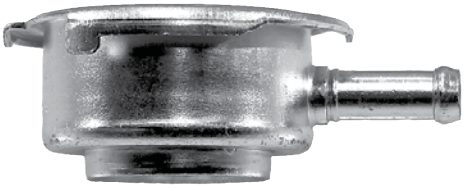

Part No.	FN3AL	Filler Neck Size	
Pressure	JAP STYLE	Type	31MM
Notes			

PRESSED ALUMINIUM FILLER NECK

Part No.	FN1AL	Filler Neck Size	
Pressure	GM/FORD	Type	41MM
Notes			

BILLET ALLOY FILLER NECK

Part No.	BILLETFN3	Filler Neck Size	
Pressure	JAP STYLE	Type	31MM
Notes			

BILLET ALLOY FILLER NECK

Part No.	BILLETFN1	Filler Neck Size	
Pressure	GM/FORD	Type	41MM
Notes			

ALUMINIUM FILLER NECK STUB - SUITS BILLET FN1

Part No.	BILLETFN1S	Filler Neck Size	
Pressure		Type	
Notes			

Part No.		Filler Neck Size	
Pressure		Type	
Notes			

CAN'T FIND WHAT YOU'RE LOOKING FOR?

CALL YOUR LOCAL BRANCH OR EMAIL SALES@ADRAD.COM.AU

AUSTRALIA TOLL FREE 1800 882 043
NEW ZEALAND TOLL FREE 0800 628 723

ADRAD RADIATORS

PERFORMANCE COOLING

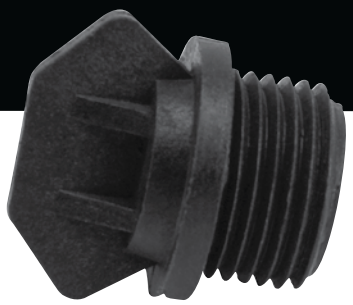

FITTINGS

ALUMINIUM DONUT

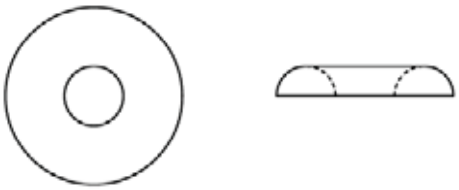

Part No.	ALDONUT25	Length	
Material	ALUMINIUM	Diameter	25 ID / 75 OD
Notes	HALF ONLY		

ALUMINIUM DONUT

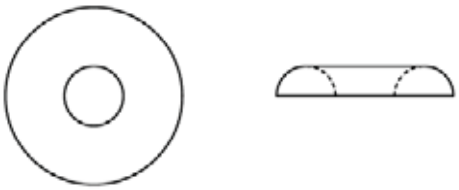

Part No.	ALDONUT32	Length	
Material	ALUMINIUM	Diameter	32 ID / 96 OD
Notes	HALF ONLY		

ALUMINIUM DONUT

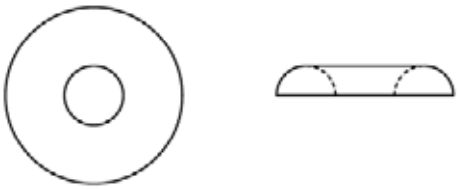

Part No.	ALDONUT38	Length	
Material	ALUMINIUM	Diameter	38 ID / 114 OD
Notes	HALF ONLY		

ALUMINIUM DONUT

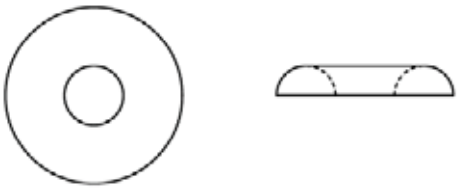

Part No.	ALDONUT44	Length	
Material	ALUMINIUM	Diameter	44 ID / 132 OD
Notes	HALF ONLY		

ALUMINIUM FITTINGS

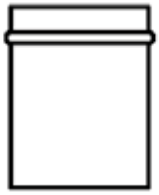

Part No.	AT35X50FITTING	Length	50mm
Material	ALUMINIUM	Diameter	35mm
Notes	SUPPLIED IN PACKS OF 10		

ALUMINIUM FITTINGS

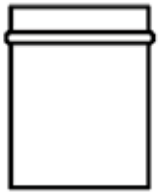

Part No.	AT38X50FITTING	Length	50mm
Material	ALUMINIUM	Diameter	38mm
Notes	SUPPLIED IN PACKS OF 10		

ALUMINIUM FITTINGS

Part No.	AT44X50FITTING	Length	50mm
Material	ALUMINIUM	Diameter	44.6mm
Notes	SUPPLIED IN PACKS OF 10		

ALUMINIUM WELD ON FITTING - DASH 4

Part No.	ADFDASH4	Length	
Material		Diameter	
Notes	SUPPLIED IN PACKS OF 10		

ALUMINIUM WELD ON FITTING - DASH 6

Part No.	ADFDASH6	Length	
Material		Diameter	
Notes	SUPPLIED IN PACKS OF 10		

ALUMINIUM WELD ON FITTING - DASH 8

Part No.	ADFDASH8	Length	
Material		Diameter	
Notes	SUPPLIED IN PACKS OF 10		

ALUMINIUM WELD ON FITTING - DASH 10

Part No.	ADFDASH10	Length	
Material		Diameter	
Notes	SUPPLIED IN PACKS OF 10		

ALUMINIUM WELD ON FITTING - DASH 12

Part No.	ADFDASH12	Length	
Material		Diameter	
Notes	SUPPLIED IN PACKS OF 10		

ALUMINIUM WELD ON FITTING - DASH 16

Part No.	ADFDASH16	Length	
Material		Diameter	
Notes	SUPPLIED IN PACKS OF 10		

ALUMINIUM WELD ON FITTING - DASH 10 FEMALE

Part No.	ADFDASH10F	Length	
Material		Diameter	
Notes	SUPPLIED IN PACKS OF 10		

ALUMINIUM TUBE

Part No.	AT25X16R	Length	1 Metre
Material		Diameter	25mm
Notes			

ALUMINIUM TUBE

Part No.	AT35X16R	Length	1 Metre
Material		Diameter	35mm
Notes			

ALUMINIUM TUBE

Part No.	AT38X16R	Length	1 Metre
Material		Diameter	38mm
Notes			

ALUMINIUM TUBE

Part No.	AT44X16R	Length	1 Metre
Material		Diameter	44mm
Notes			

ALUMINIUM TUBE

Part No.	AT64X16R	Length	1 Metre
Material		Diameter	64mm
Notes			

ALUMINIUM MANDREL BEND

Part No.	ADMB125X180	Length	BEND 180°
Material		Diameter	DIAMETER 1.25”
Notes			

ALUMINIUM MANDREL BEND

Part No.	ADMB125X45	Length	45°
Material		Diameter	1.25”
Notes			

ALUMINIUM MANDREL BEND

Part No.	ADMB125X90	Length	90°
Material		Diameter	1.25”
Notes			

ALUMINIUM MANDREL BEND

Part No.	ADMB15X180	Length	180°
Material		Diameter	1.5”
Notes			

ALUMINIUM MANDREL BEND

Part No.	ADMB15X45	Length	45°
Material		Diameter	1.5”
Notes			

ALUMINIUM MANDREL BEND

Part No.	ADMB15X90	Length	90°
Material		Diameter	1.5”
Notes			

ALUMINIUM MANDREL BEND

Part No.	ADMB225X90	Length	90°
Material		Diameter	2.25”
Notes			

ALUMINIUM MANDREL BEND

Part No.	ADMB25X180	Length	180°
Material		Diameter	2.5”
Notes			

ALUMINIUM MANDREL BEND

Part No.	ADMB25X45	Length	45°
Material		Diameter	2.5”
Notes			

ALUMINIUM MANDREL BEND

Part No.	ADMB25X90	Length	90°
Material		Diameter	2.5”
Notes			

ALUMINIUM MANDREL BEND

Part No.	ADMB275X45	Length	45°
Material		Diameter	2.75”
Notes			

ALUMINIUM MANDREL BEND

Part No.	ADMB275X90	Length	90°
Material		Diameter	2.75”
Notes			

ALUMINIUM MANDREL BEND

Part No.	ADMB2X45	Length	45°
Material		Diameter	2.0”
Notes			

ALUMINIUM MANDREL BEND

Part No.	ADMB2X90	Length	90°
Material		Diameter	2.0”
Notes			

ALUMINIUM MANDREL BEND

Part No.	ADMB3X45	Length	45°
Material		Diameter	3.0”
Notes			

ALUMINIUM MANDREL BEND

Part No.	ADMB3X90	Length	90°
Material		Diameter	3.0”
Notes			

Part No.		Length	
Material		Diameter	
Notes			

RUBBER MOUNTS

RUBBER MOUNT

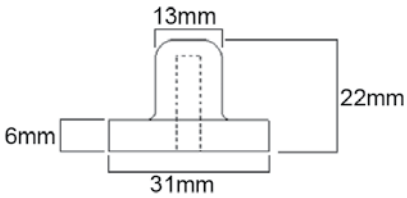

Part No.	RUM2	Length	
Material		Diameter	13/31

RUBBER MOUNT

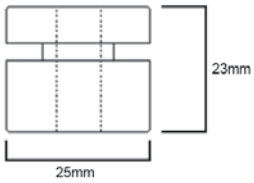

Part No.	RUM6	Length	
Material		Diameter	25

RUBBER MOUNTING BUSH

Part No.	RUM7	Length	
Material		Diameter	25

LANDCRUISER RUBBER MOUNTS KIT

Part No.	TYLCMOUNTS	Length	
Material		Diameter	N/A

COMMODORE VT/VX/VY/VZ RUBBER MOUNTS KIT

Part No.	HLCMMOUNTS	Length	
Material		Diameter	N/A
Notes	INCLUDES 2 SMALL / 2 LARGE MOUNTS		

Part No.		Length	
Material		Diameter	
Notes			

DRAIN PLUGS

PLASTIC DRAIN PLUG

Part No.	0350	Length	25mm
Material	PLASTIC	Diameter	12mm THREAD
Notes	SUIT TOYOTA CELICA		

PLASTIC DRAIN PLUG

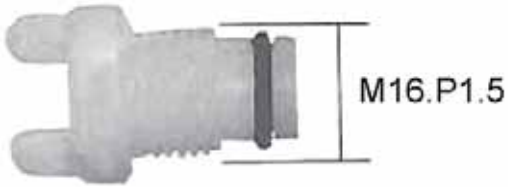

Part No.	041CT	Length	19mm
Material	PLASTIC	Diameter	14mm THREAD
Notes	19mm HEX / 14mm THREAD / O RING Part. 041CU		

PLASTIC DRAIN PLUG

Part No.	DPP001	Length	26mm
Material	PLASTIC	Diameter	M14 X P2.0
Notes			

PLASTIC DRAIN PLUG

Part No.	DPP002	Length	17mm
Material	PLASTIC	Diameter	M12 X P1.25
Notes			

PLASTIC DRAIN PLUG

Part No.	DPP003	Length	14mm
Material	PLASTIC	Diameter	M10 X P1.25

PLASTIC DRAIN PLUG

Part No.	DPP004	Length	10mm
Material	PLASTIC	Diameter	M10 X P1.25

PLASTIC DRAIN PLUG

Part No.	DPP005	Length	29mm
Material	PLASTIC	Diameter	M14 X P1.25

PLASTIC DRAIN PLUG

Part No.	DPP006	Length	13mm
Material	PLASTIC	Diameter	M12 X P1.25

PLASTIC DRAIN PLUG

Part No.	DPP007	Length	10mm
Material	PLASTIC	Diameter	M12 X P1.25
Notes			

PLASTIC DRAIN PLUG

Part No.	DPP008	Length	18mm
Material	PLASTIC	Diameter	M8 X P1.25
Notes	6mm THREAD		

PLASTIC DRAIN PLUG

Part No.	DPP009	Length	17mm
Material	PLASTIC	Diameter	M12
Notes	SUIT SUB012PT		

PLASTIC DRAIN PLUG

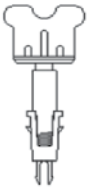

Part No.	DPP1	Length	50mm
Material	PLASTIC	Diameter	
Notes			

PLASTIC DRAIN PLUG

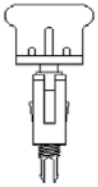

Part No.	DPP2	Length	40mm
Material	PLASTIC	Diameter	6mm THREAD
Notes			

PLASTIC DRAIN PLUG

Part No.	DPP3	Length	14mm
Material	PLASTIC	Diameter	12mm X 1 1/4mm
Notes			

PLASTIC DRAIN PLUG

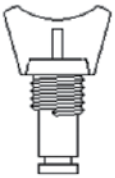

Part No.	DPP4	Length	25mm
Material	PLASTIC	Diameter	14mm X 2mm
Notes			

PLASTIC DRAIN PLUG

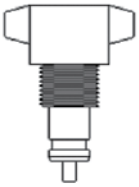

Part No.	DPP5	Length	27mm
Material	PLASTIC	Diameter	14mm THREAD
Notes			

PLASTIC DRAIN PLUG

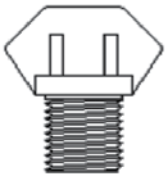

Part No.	DPP6	Length	16mm
Material	PLASTIC	Diameter	1/4” X 18 NPT
Notes			

PLASTIC DRAIN PLUG

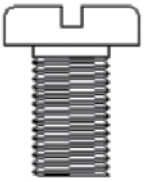

Part No.	DPP9	Length	17mm
Material	PLASTIC	Diameter	10mm X 1 1/2mm
Notes			

PLASTIC DRAIN PLUG

Part No.	DPP11	**Length**	13mm
Material	PLASTIC	**Diameter**	1/2” X 14 NPT
Notes			

PLASTIC DRAIN PLUG

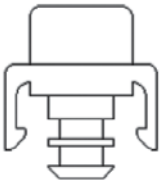

Part No.	DPP12	**Length**	9mm
Material	PLASTIC	**Diameter**	
Notes			

ADRAD RADIATORS

PERFORMANCE COOLING

ELECTRIC FANS

Electric Fans by Davies Craig

PART NO.	X-REF	DESCRIPTION	WATT	CFM	CURRENT DRAW - AMP	DIAMETER - MM	DEPTH - MM
DCSL8	0035	12V FULL FAN KIT	80	424	5.0	213	52
DCSL8S	0135	12V SHORT FAN KIT	80	424	5.0	213	52
DCSL9	0060	12V FULL FANKIT	80	635	6.5	242	55
DCSL9S	0160	12V SHORT FAN KIT	80	635	6.5	242	55
DCSL10	0045	12V FULL FAN KIT	80	847	7.0	270	64
DCSL10S	0145	12V SHORT FAN KIT	80	847	7.0	270	64
DCSLX10	0047	12 V FULL FAN KIT SLIMLINE	90	847	7.0	278	55
DCSLX10S	0147	12V SHORT FAN KIT SLIMLINE	90	847	7.0	278	55
DCSL12	0062	12V FULL FAN KIT	100	1060	9.0	293	51
DCSL12S	0162	12V SHORT FAN KIT	100	1060	9.0	293	51
DCSL14	0064	FULL FAN KIT	130	1270	11.0	348	76
DCSL14S	0164	12V SHORT FAN KIT	130	1270	11.0	348	76
DCSL16	0066	12V FULL FAN KIT	225	2120	19.0	424	100
DCSL16S	0166	12V SHORT FAN KIT	225	2120	19.0	424	100

Type	Contains
Full Kit	Fan Assembly, Wiring Loom, Relay, Mounting Hardware, Instruction Sheets
Short	Fan Motor, Fan Blade, Fan Shroud

DAVIES CRAIG THERMATIC FAN - 8 INCH

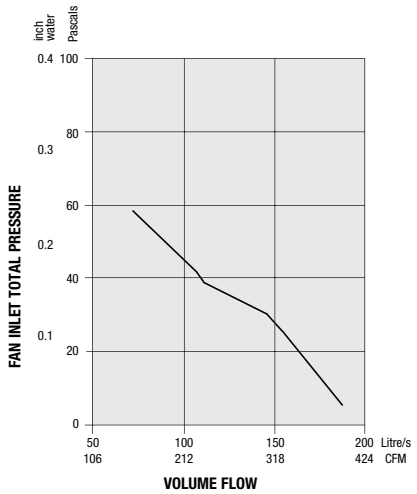

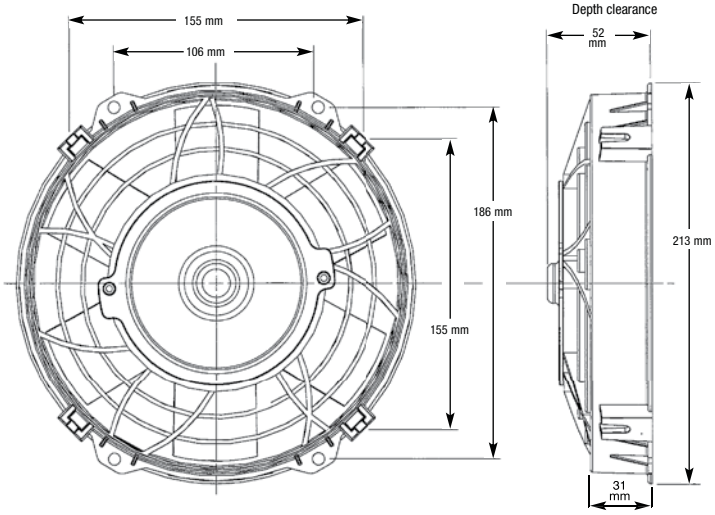

Part No.	DCSL8	Current Draw	5.0	Watt		CFM	424	Diameter	213mm	Depth	52mm
X-Ref	0035										

DAVIES CRAIG THERMATIC FAN - 9 INCH

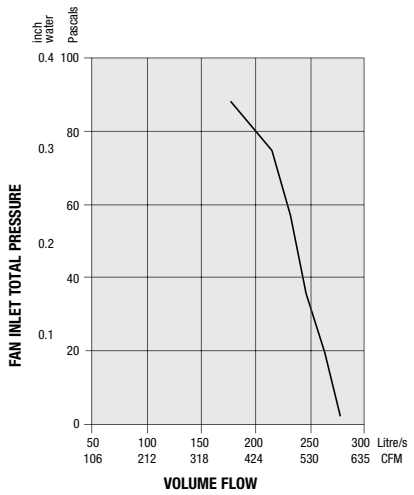

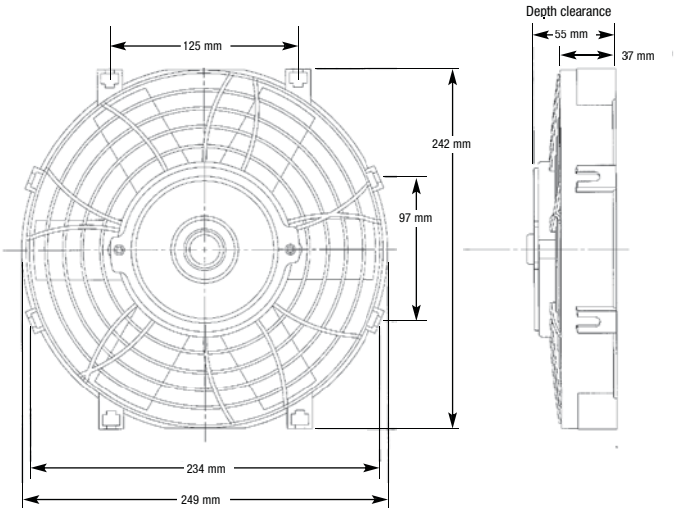

Part No.	DCSL9	Current Draw	6.5	Watt		CFM	635	Diameter	242mm	Depth	55mm
X-Ref	0060										

DAVIES CRAIG THERMATIC FAN - 10 INCH

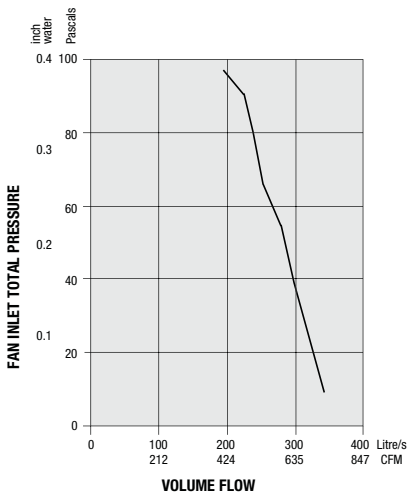

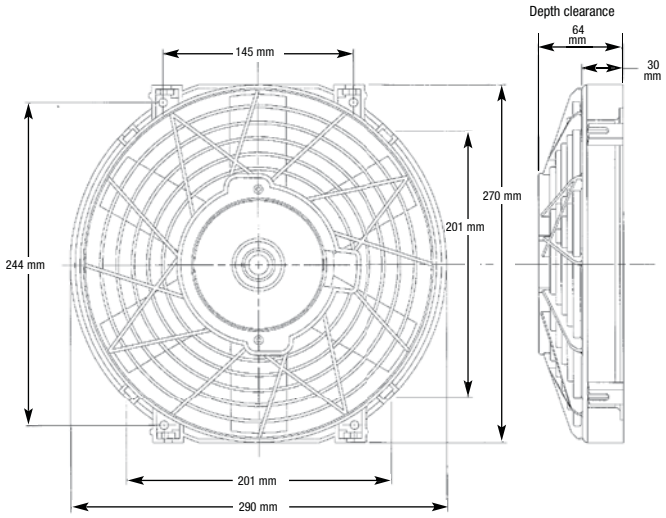

Part No.	DCSL10	Current Draw	7.0	Watt	90	CFM	847	Diameter	270mm	Depth	64mm
X-Ref	0045										

DAVIES CRAIG THERMATIC FAN - 10 INCH SLIMLINE

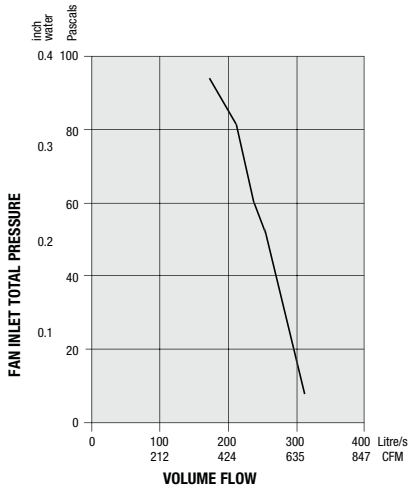

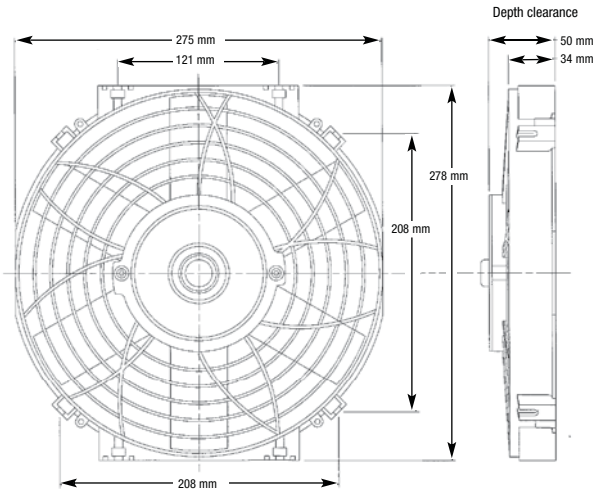

Part No.	DCSLX10	Current Draw	7.0	Watt	90	CFM	847	Diameter	278mm	Depth	55mm
X-Ref	0047										

DAVIES CRAIG THERMATIC FAN - 12 INCH

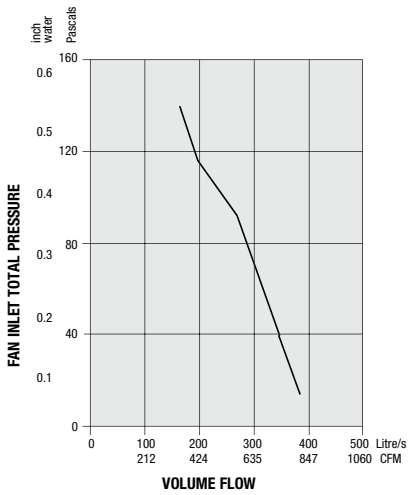

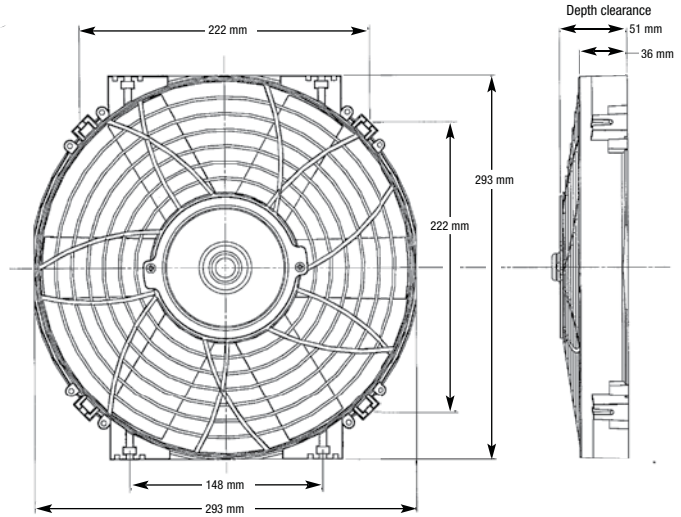

Part No.	DCSL12	Current Draw	9.0	Watt	130	CFM	1060	Diameter	293mm	Depth	51mm
X-Ref	0062										

DAVIES CRAIG THERMATIC FAN - 14 INCH SLIMLINE

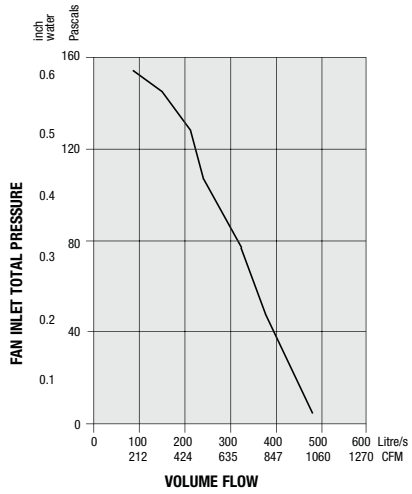

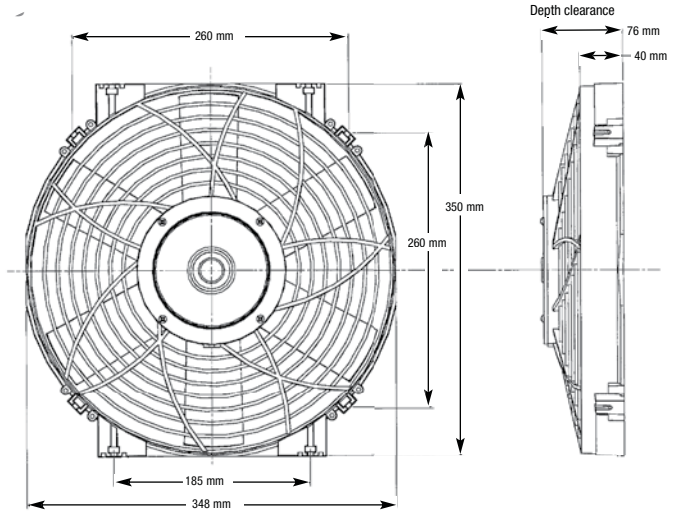

Part No.	DCSL14	Current Draw	11.0	Watt		CFM	1270	Diameter	348mm	Depth	76mm
X-Ref	0064										

DAVIES CRAIG THERMATIC FAN - 16 INCH

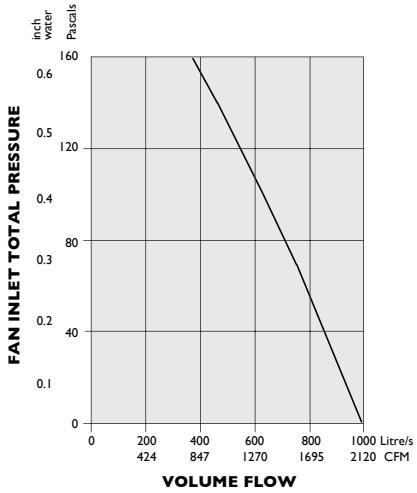

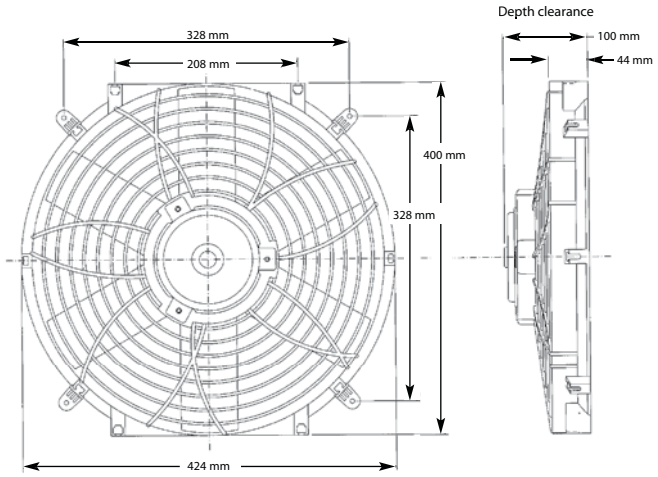

Part No.	DCSL16	Current Draw	19.0	Watt		CFM	2120	Diameter	424mm	Depth	100mm
X-Ref	0066										

Electric Fans by Maradyne

PART NO.	X-REF	DESCRIPTION	WATT	CFM	CURRENT DRAW - AMP	DIAMETER - MM	DEPTH - MM
EFMAR01	EF3526,EF3527	12V 9" SKEW BLADE FAN	130	790	7.70	247.0	66.3
EFMAR03	EF3528,EF3529	12V 10" SKEW BLADE FAN	130	950	7.90	284.5	66.3
EFMAR05	EF3530,EF3531	12V 11" SKEW BLADE FAN	130	1110	7.40	310.0	66.3
EFMAR07	EF3532,EF3533	12V 12" SKEW BLADE FAN	130	1155	7.70	336.0	66.5
EFMAR09		12V 14" SKEW BLADE FAN	160	1555	10.10	382.0	75.9
EFMAR11	EF3534,EF3535	12V 16" SKEW BLADE FAN	225	2170	17.70	414.0	84.3

MARADYNE 12V 9" SKEW BLADE FAN

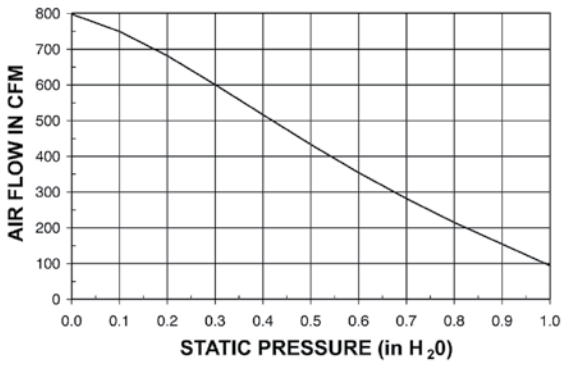

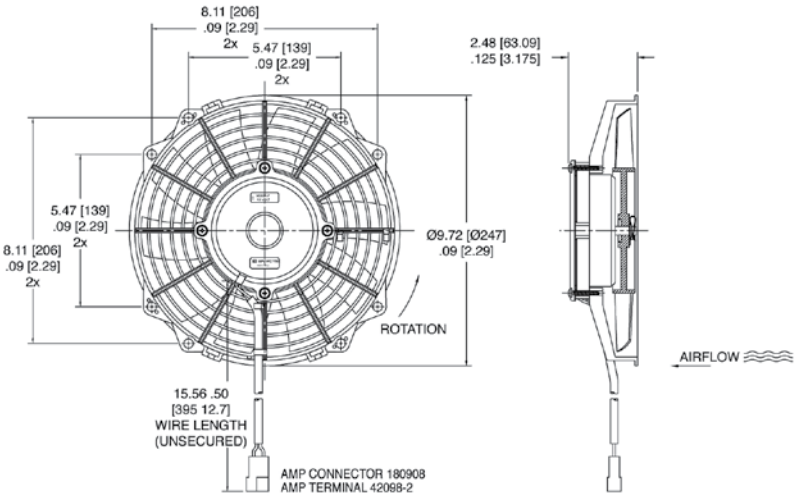

Part No.	EFMAR01	Current Draw	7.70 Amp	Watt	130	CFM	790	Diameter	247.0mm	Depth	66.3mm
X-Ref	EF3526, EF3527										

MARADYNE 12V 10" SKEW BLADE FAN

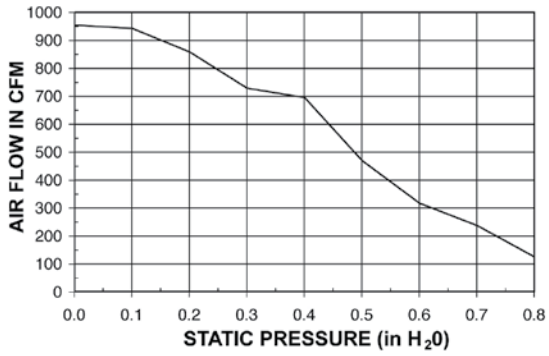

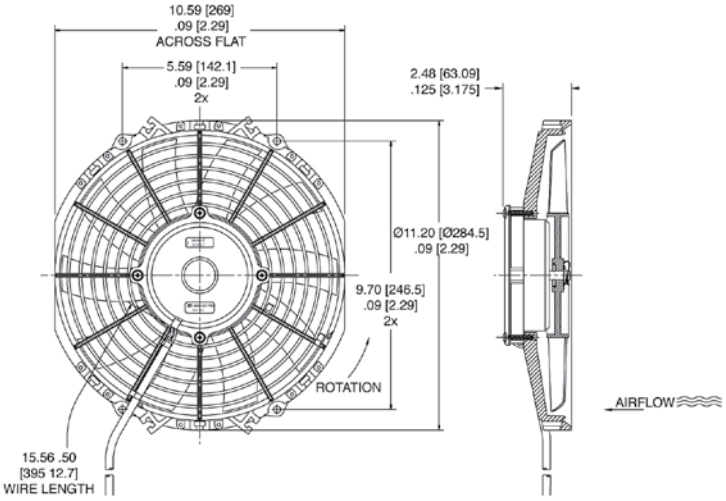

Part No.	EFMAR03	Current Draw	7.90 Amp	Watt	130	CFM	950	Diameter	284.5mm	Depth	66.3mm
X-Ref	EF3528, EF3529										

MARADYNE 12V 11" SKEW BLADE FAN

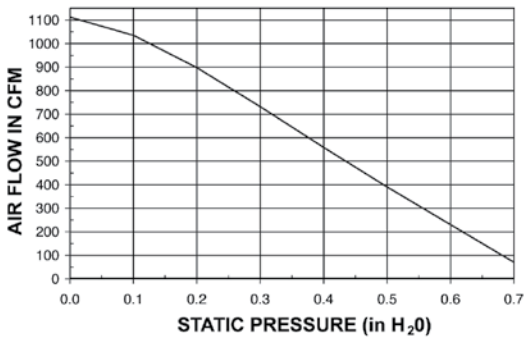

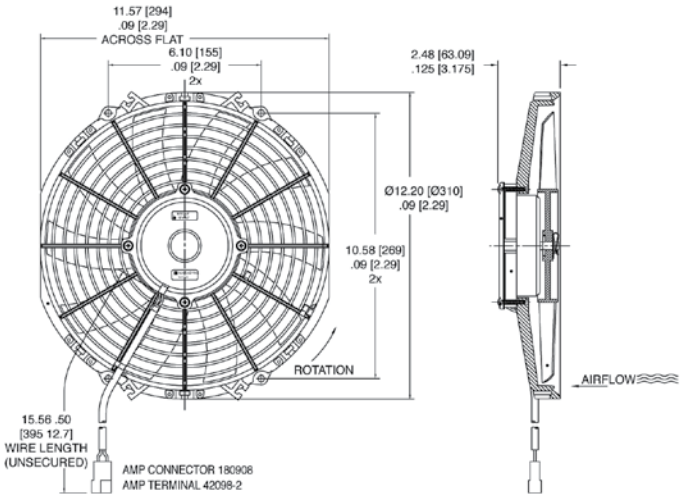

Part No.	EFMAR05	Current Draw	7.40 Amp	Watt	130	CFM	1110	Diameter	310.0mm	Depth	66.3mm
X-Ref	EF3530, EF3531										

MARADYNE 12V 12" SKEW BLADE FAN

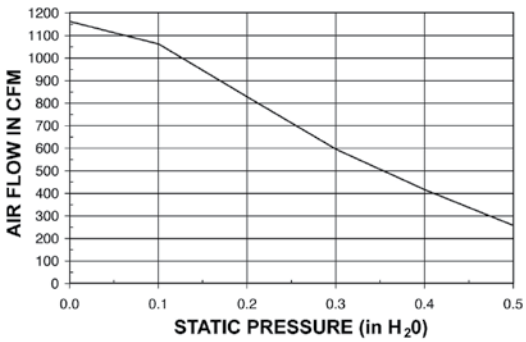

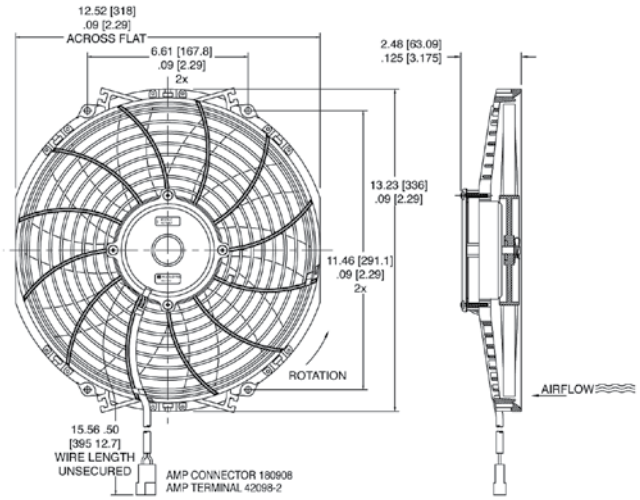

Part No.	EFMAR07	Current Draw	7.70 Amp	Watt	130	CFM	1155	Diameter	336.0mm	Depth	66.5mm
X-Ref	EF3532, EF3533										

MARADYNE 12V 14" SKEW BLADE FAN

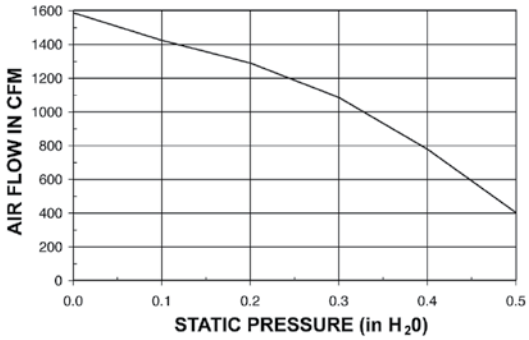

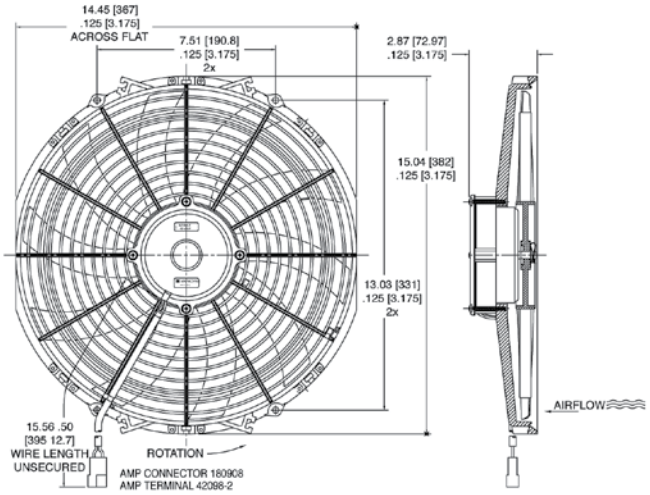

Part No.	EFMAR09	Current Draw	10.10 Amp	Watt	160	CFM	1555	Diameter	382.0mm	Depth	75.9mm
X-Ref	N/A										

MARADYNE 12V 16" SKEW BLADE FAN

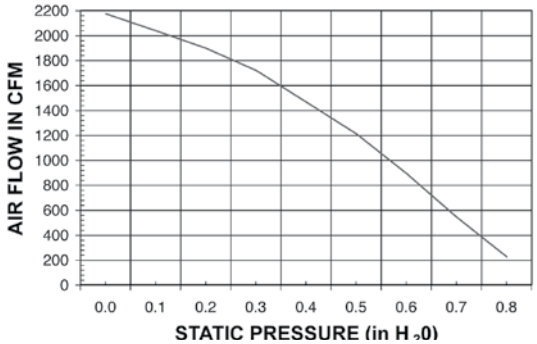

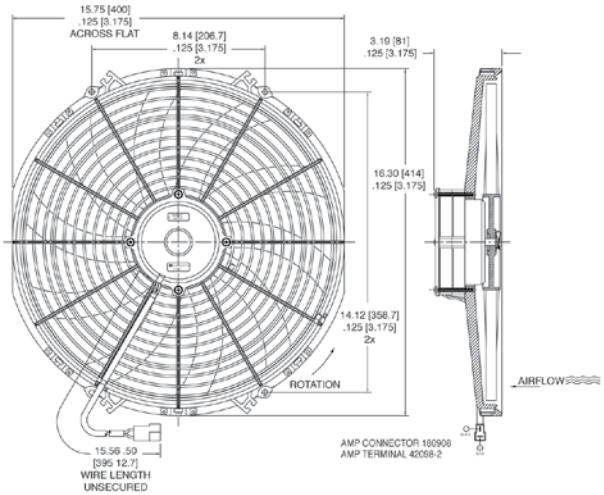

Part No.	EFMAR11	Current Draw	17.7 Amp	Watt	225	CFM	2170	Diameter	414.0mm	Depth	84.3mm
X-Ref	EF3534, EF3535										

NOT SURE WHICH PART YOU NEED?

CALL YOUR LOCAL BRANCH OR EMAIL SALES@ADRAD.COM.AU

AUSTRALIA TOLL FREE 1800 882 043
NEW ZEALAND TOLL FREE 0800 628 723

ADRAD RADIATORS

PERFORMANCE COOLING

ELECTRIC PUMPS

DAVIES CRAIG - EWP80 (80L/min.) - Suitable for naturally-aspirated and turbo engines up to 3 litres

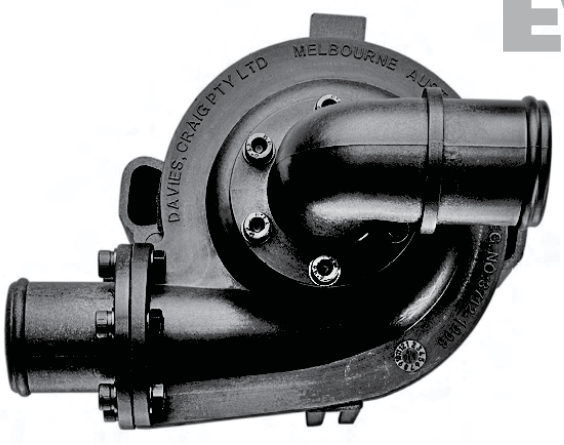

EWP® ELECTRIC WATER PUMP

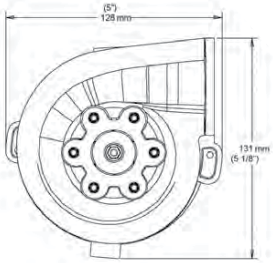

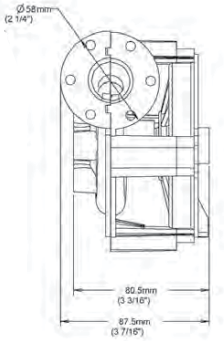

EWP®80 Pressure v Flow @ 13.0V Actual

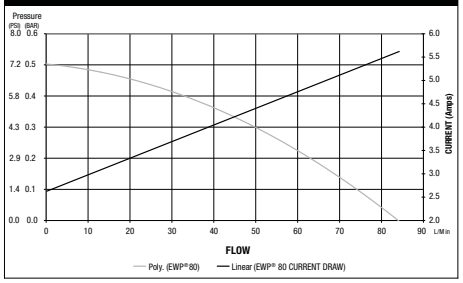

Part No.	8005
Operating Voltage	3V DC to 15V DC
Maximum Current	7.5A
Flow rate (max.)	80L/min @ 13.5V DC
Operating temp.	-40° to 130°C
Pump design	Clockwise centrifugal
Motor life	3,000 hours continuous at 80°C & 12V DC; 6,000 hours with an EWP®Fan Digital Controller
Pump weight	900 grams
Pump material	Nylon 66, 30% glass filled
Burst pressure	350kPa
Seal	Ceramic face seal
Fits hose sizes	32mm to 51mm (1¼" to 2")
Kit Contents	EWP80 Pump, Straight adaptor, Elbow adaptor, O-Ring, Wiring harness, Sleeve 3mm rubber adaptors, Sleeve 6mm, Hose clamps, assorted hardware bag (incl. relay)
Options	Alloy adaptor 1" NPT, Alloy adaptor 1¼" NPT, Alloy adaptor straight (19mm) and Alloy adaptor straight (26mm)
Notes	The EWP® is a recirculating pump which is ideal for a 'closed system' similar to an automotive cooling system; it is not 'self-priming'.

DAVIES CRAIG - EWP115 (115L/min.) Suitable for large 6cyl V8 engines, heavy-duty 4WDs & engines over 400HP.

EWP® ELECTRIC WATER PUMP

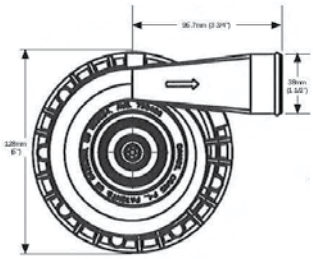

EWP®115 Pressure v Flow @ 13.0V Actual

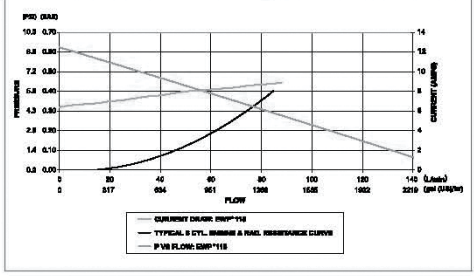

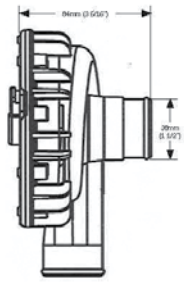

Part No.	8025
Operating Voltage	3V DC to 15V DC
Maximum Current	10A
Flow rate (max.)	115L/min @ 13V DC
Operating temp.	-40° to 130°C
Pump design	Clockwise centrifugal with volute chamber
Motor life	3,000 hours continuous at 80°C & 12V DC, 7,000 hours with an EWP®/Fan Digital Controller
Pump weight	980 grams
Pump material	Nylon 66, 30% glass filled
Burst pressure	500kPa
Seal	Ceramic face seal
Fits hose sizes	38mm to 51mm (1½" to 2")
Kit Contents	EWP®115 Pump, Wiring harness, Sleeve 3mm rubber adaptors, Hose clamps, assorted hardware bag (incl. relay)
Options	90° Hose adaptor
Notes	The EWP® is a recirculating pump which is ideal for a 'closed system' similar to an automotive cooling system; it is not 'self-priming'.

DAVIES CRAIG - DIGITAL CONTROLLER - SUITS PUMPS EWP®80, EWP®115, EBP®,

For optimum control of Electric Water Pumps - 12 VOLT ONLY

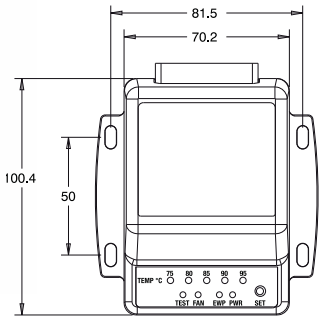

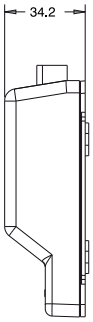

Digital Controller operation

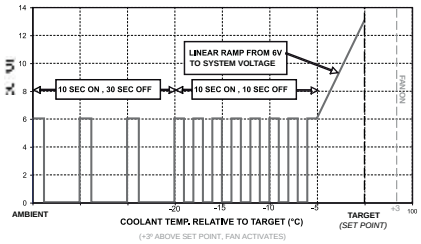

Part No.	8020
Output voltage	5V DC to 15V DC
Maximum Current	12A
Operating temp.	-20° to 60°C
Targeted (set) temperatures	75°C, 80°C, 85°C, 90°C, 95°C
Fan cut-in temperature	3°C above the targeted (set) temperature
Controller type	PCB with micro-processor
Sensor type	Thermister in housing
Time-out	2 minutes maximum or set -5°C
Indicator LEDs	Temperature, power, pump, test, fan
Weight	90 grams
Dimensions	101mm (l) x 95mm (w) x 35mm (d)
Kit Contents	Digital Controller, Instructions, Wiring harness, In-line adaptor, Sleeve 3mm rubber adaptors, Hose clamp, Thermal sensor, Assorted Hardware
Notes	The EWP® is a recirculating pump which is ideal for a 'closed system' similar to an automotive cooling system; it is not 'self-priming'.

DAVIES CRAIG - DIGITAL CONTROLLER - SUITS PUMPS EWP®80, EWP®115, EBP®,

For optimum control of Electric Water Pumps - 12 VOLT ONLY.
A high-performance brushless motor, magnetic-drive pump. Compact and versatile 12V pump for a range of applications including booster for car heater and LPG systems, solar and marine applications, water-cooled motorcycle, go-kart engines, turbo air/water intercoolers, caravans, motor homes and domestic irrigation.

EBP ELECTRIC BOOSTER PUMP

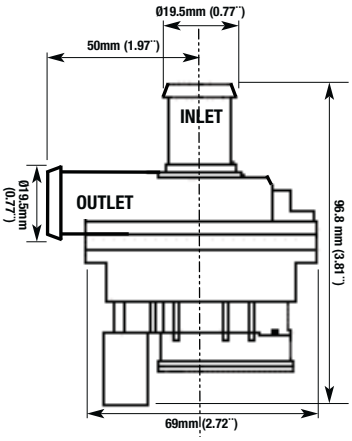

EBP® Performance Curve @ 13.0V Actual

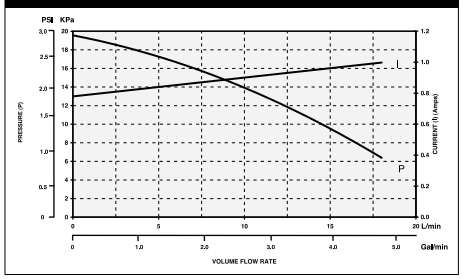

Part No.	9001
Operating Voltage	10V DC to 27V DC
Maximum Current	5.5A @ 24V
Flow rate (max.)	110L/min @ 24V DC
Operating temp.	-40° to 130°C
Pump design	Clockwise centrifugal
Motor life	3,000 hours continuous at 80°C & 24V DC
Pump weight	1020 grams
Pump material	Nylon 66, 30% glass filled
Burst pressure	350kPa
Seal	Ceramic face seal
Fits hose sizes	32mm to 51mm (1¼" to 2")
Kit Contents	EWP®110 Pump, Straight adaptor, Elbow adaptor, O-Ring, Wiring harness, Sleeve 3mm, Sleeve 6mm, Hose clamps, assorted hardware bag (incl. relay)
Options	Alloy adaptor 1" NPT, Alloy adaptor 1¼" NPT, Alloy adaptor straight (19mm) and Alloy adaptor straight (26mm)
Notes	The EWP® is a recirculating pump which is ideal for a 'closed system' similar to an automotive cooling system; it is not 'self-priming'.

CAN'T FIND WHAT YOU'RE LOOKING FOR?

CALL YOUR LOCAL BRANCH OR EMAIL SALES@ADRAD.COM.AU

AUSTRALIA TOLL FREE 1800 882 043
NEW ZEALAND TOLL FREE 0800 628 723

ADRAD RADIATORS

PERFORMANCE COOLING

PRESSED TANKS

Pressed Tanks

HOLDEN COMMODORE

Part No.	ALTANK1	**Header Size**	442 x 78
Height	58mm	**Notes**	

HOLDEN HQ

Part No.	ALTANK3	**Header Size**	629 x 89
Height	65mm	**Notes**	

HOLDEN HQ

Part No.	ALTANK9	**Header Size**	625 x 70
Height	60mm	**Notes**	

FORD FALCON XD

Part No.	ALTANK2	**Header Size**	468 x 78
Height	60mm	**Notes**	

FORD FALCON XY GT - TOP

Part No.	ALTANK7	**Header Size**	607 x 75
Height	68mm	**Notes**	

FORD FALCON XY GT - BOTTOM

Part No.	ALTANK8	**Header Size**	607 x 74
Height	52mm	**Notes**	

SPRINT CAR

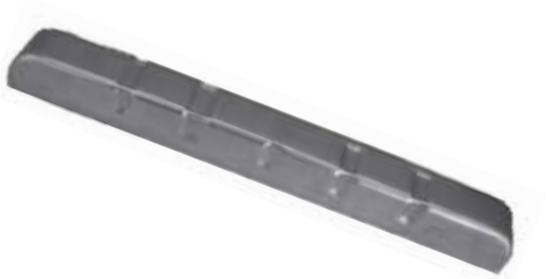

Part No.	ALTANK4	**Header Size**	520 x 51
Height	52mm	**Notes**	

Part No.		Header Size	
Height		Notes	

ADRAD RADIATORS

PERFORMANCE COOLING

WORKSHOP EQUIPMENT

TOOLS

FIN PLIERS

Part No.	3301160	Notes	

RELAY ADJUSTING PLIERS

Part No.	3221135	Notes	

INFRARED THERMOMETER

Part No.	TUNI050	Notes	With laser pointer Range -50 to 550 °C

Part No.		Notes	

TEST KITS / REPAIR

Kool-It Electrolysis Indicator

Part No.	TUNI209	Notes	

EPOXY REPAIR KIT

Part No.	RP175GUN	Notes	Kit Includes -Gun

EPOXY CARTRIDGE

Part No.	RP177EPOXY	Notes	50ml

EPOXY KIT REPLACEMENT TIP

Part No.	RP178TIP	Notes	

ACCUTECH EPOXY

Part No.	ACCUEPOXY	Notes	150ml

DAYROD 820 COATED ROD

Part No.	BA820	Notes	Aluminium Repair Rod(Pack of 10)

STIC-TITE

Part No.	49	Notes	For Repairing Aluminium Radiators

Part No.		Notes	

RADIATOR SOCKS

RADIATOR SOCK SMALL (1”)

Part No.	RS01	Notes	

RADIATOR SOCK MEDIUM (1.5”)

Part No.	RS02	Notes	

RADIATOR SOCK LARGE (2.5”)

Part No.	RS03	Notes	

RADIATOR SOCK 4”

Part No.	RS04	Notes	

RADIATOR SOCK 6”

Part No.	RS05	Notes	

Part No.		Notes	

NEED A SPECIAL OR CUSTOMISED PART?

CALL YOUR LOCAL BRANCH
OR EMAIL SALES@ADRAD.COM.AU

AUSTRALIA TOLL FREE 1800 882 043
NEW ZEALAND TOLL FREE 0800 628 723

Warranty Policy (Q90POL001)

This Warranty is given by Adrad Pty Ltd ACN 008 062 502 (Adrad) of 26-50 Howards Road, Beverley SA 5009. Telephone: Toll free 1800 882 043. Please also refer to current Terms & Conditions of Sale & Service document.

SCOPE OF WARRANTY

Adrad warrants in favour of the original purchaser of this product (Purchaser) that the product will be free from manufacturing defects in materials and workmanship for the period from the date of original installation specified below in respect of the product (Warranty Period):

PRODUCT	WARRANTY PERIOD
COMPLETE RADIATOR ASSEMBLIES & RADIATOR CORES When installed in • domestic passenger vehicles, AND • with a payload not exceeding 1 tonne, AND • used exclusively for private use	2 YEARS or 60,000 kms (whichever occurs first)
ALL PRODUCTS When installed in vehicles: • used for racing, or • with known design faults where the original part has a history of premature failure	3 Months
ALL OTHER PRODUCTS & APPLICATIONS Excluding workshop tools & equipment	1 YEAR
WORKSHOP TOOLS & EQUIPMENT	Warranty as provided by original manufacturer

If within the Warranty Period a defect in materials and/or workmanship is discovered in the product then Adrad will, at Adrad's option, repair or replace the product at its cost or refund the purchase price paid by the Purchaser in accordance with this Warranty. If the product is repaired or replaced under this Warranty, the repaired or replacement product will be covered by this Warranty only for the remainder of the Warranty Period

This Warranty will NOT apply

- To fair wear and tear
- Where the product is purchased via online auction
- If any serial number or date code on the product is removed
- If the product is:
  - altered or modified prior to or after installation (unless approved by Adrad QA department);
  - stored, handled, installed or maintained in any way contrary to Adrad's instructions or specifications or otherwise improperly stored, handled, installed or maintained;
  - subject to faulty power supply, power failure, electrical spikes or surges;
  - exposed to any abnormal climate conditions or operating circumstances (eg. damaged as a result of a fan, incorrect coolant mix, incorrect refrigerant or incorrect lubricant);
  - subjected to misuse, neglect, negligence, accidental damage, or act of God; or
  - used after any defect in the product becomes apparent or would have become apparent to a reasonably prudent operator or user.

Without limiting the above, this Warranty will NOT apply in respect of any radiator or core unless:

- the radiator, engine and heater core are machine power flushed at time of installation and at least once every 12 months / 30,000 km (whichever occurs first) thereafter;
- a stray current test is performed at time of installation and shows a reading less than 0.05 volts;
- the radiator is cleaned out at least once every 12 months / 30,000 km (whichever occurs first) using a quality alkaline cooling system cleaner in accordance with the instructions for use of such cleaner;
- the correct dosage of coolant/inhibitor which complies with Australian Standard AS2108-2004(A) or the vehicle manufacturer's recommendations is used in the radiator;
- the correct amount of distilled, demineralised or reverse osmosis water as recommended by the coolant/inhibitor or vehicle manufacturer is used in mixing coolant/inhibitor;
- the vehicle manufacturer's instructions for filling the cooling system are followed to ensure that air locks are removed from the system, the vehicle has been run up to normal operating temperature, the coolant/inhibitor level is checked and all components are checked to ensure they are free from leaks;
- the correct pressure cap as specified by the vehicle manufacturer is utilised and in good working condition;
- the vehicle's cooling system is maintained (free from rust corrosion, sludge and foreign material) by an Adrad authorised radiator repair centre at least once every 12 months / 30,000 kms (whichever occurs first).

No Adrad employee, distributor or reseller, authorised radiator repair centre or other agent of Adrad has authority to vary the terms of this Warranty.

CLAIMING UNDER THIS WARRANTY

In order to make a claim under this Warranty, the place of purchase (Purchaser) must be notified within one month of the defect becoming apparent. The Purchaser must within 7 days after notification contact Adrad to obtain a Warranty Claim Authorisation Number for the product and to be notified of Adrad's return address for the product:

By telephone: 1800 882 043 or by post: 26-50 Howards Rd, Beverley, SA 5006

Continued over page...

Warranty Policy (cont) (Q90POL001)

The Purchaser must provide the following information to Adrad when obtaining a Warranty Claim Authorisation Number:

- date of purchase of the product and invoice number for the product;
- date of manufacture or serial number of the product (appearing on identification plate attached to the core);
- description of the defect;
- the Purchaser's contact details.

The defective product must be returned to the return address notified by Adrad together with the invoice or other proof of purchase of the product and the Warranty Claim Authorisation Number.

Adrad will not accept any returned products which have not been returned strictly in accordance with this Warranty.

If the product is found to be working satisfactorily on return, the Purchaser must pay all reasonable costs of testing the product before the product will be redelivered to the Purchaser.

Adrad's determination of the existence of any defect in the product or the cause of any defect in the product is conclusive.

Adrad may at its discretion repair or replace the defective product or parts with refurbished product or parts or may replace the defective product or parts with an alternative product or parts (different in size, colour, shape, weight, brand and/or other specification).

Any products or parts which are replaced under this Warranty become the property of Adrad.

The Purchaser will be responsible for all costs of returning the product to Adrad (including removal and refit) and for collection or redelivery of the product (whether original or repaired and/or replacement product) by Adrad and any other expenses of the Purchaser in claiming under this Warranty.

LIMIT ON LIABILITY

Adrad will not be responsible for:

- any loss of profits or other indirect or consequential loss arising from any defect in the product;
- any loss or damage to the product occurring while the product is in transit (either on return to Adrad or upon redelivery to the Purchaser of the original or repaired and/or replacement product);
- any loss or damage caused by any delay in assessing the Purchaser's claim or in repairing or replacing the product.

APPLICATION OF CONSUMER LAWS

The benefits of this Warranty are in addition to any other rights and remedies available to the Purchaser under the law.

Nothing in this Warranty is intended to have the effect of contracting out of any applicable provision of the Australian Consumer Law or the New Zealand Fair Trading Act 1986, except to the extent permitted by those Acts.

The Australian Consumer Law requires the inclusion of the following statement in any warranty in respect of goods supplied to a consumer as defined under the Australian Consumer Law:

> *"Our goods come with guarantees that cannot be excluded under the Australian Consumer Law. You are entitled to a replacement or refund for a major failure and for compensation for any other reasonably foreseeable loss or damage. You are also entitled to have the goods repaired or replaced if the goods fail to be of acceptable quality and the failure does not amount to a major failure."*

Glossary

Air/ Air Intercooler	Usually front mounted, an intercooler using ambient air to cool combustion air.
Air/ Water Intercooler	A heat exchanger using water to cool combustion air.
Billet	An item machined from a single solid piece of material.
CAC	Charge Air Cooler. Another name for Intercooler. A heat exchanger designed to cool the hot combustion air produced by a turbocharger or supercharger.
Dimpled Tubes	Tubes used for water cores that have dimpled faces, causing the water to turbulate, reducing lamina flow, increasing cooling performance.
Donut	A pressed aluminium ring. Two of these are welded together to provide a hollow donut shape, which can be cut to the required angle to produce a tight smooth pipe bend.
FPI	Fins Per Inch. The number of cooling fins per linear inch.
Hem	The turned over edge of fin, designed to improve strength and permit alternative designs.
Louvre	The small angled slits placed in a fin to improve heat exchange.
Pressure drop	The amount of pressure lost by the air passing through a heat exchanger. Undesirable in Intercoolers.

Notes

Notes

Order online anytime with

RadShop®

Australia's coolest online shopping experience

Find it faster with our *RADSEARCH*

Find products you are looking for faster using our vehicle Radsearch function

- *Make Model Search*
- *Save time & money*
- *Fast & easy ordering 24/7*
- *Secure Access*
- *Shows price and location*

radshop.com.au

PERFORMANCE COOLING

2013 PRODUCT CATALOGUE

CALL TOLL FREE 1800 882 043 OR VISIT RADSHOP.COM.AU

NATIONAL HEAD OFFICE

26 - 50 Howards Road
Beverley SA 5009

T: (08) 8243 9888
F: (08) 8347 7245

Accounts & Administration
T: (08) 8243 9888

TOLL FREE: 1800 678 435

F: (08) 8345 3202

SOUTH AUSTRALIA & NT

26 - 50 Howards Road
Beverley SA 5009

T: (08) 8243 9876
F: (08) 8347 7245

NEW SOUTH WALES

Sydney
70 Long Street
Smithfield NSW 2164

T: (02) 9729 2502
F: (02) 9729 2503

Newcastle
8 Pippita Close
Beresfield NSW 2322

T: (02) 4964 4033
F: (02) 4964 4238

QUEENSLAND

Brisbane
11 Permarig Place
Rocklea QLD 4106

T: (07) 3272 7688
F: (07) 3272 7829

Gold Coast
6-10 Traders Way
Currumbin QLD 4223

T: (07) 5598 1888
F: (07) 5598 1980

Townsville
5 Vesuvius Street
Garbutt QLD 4814

T: (07) 4775 6405
F: (07) 4725 1152

WESTERN AUSTRALIA

Perth
231 Collier Road
Bayswater WA 6053

T: (08) 9473 4666
F: (08) 9370 4600

VICTORIA

Noble Park
40 Overseas Drive
Noble Park VIC 3174

T: (03) 9790 4900
F: (03) 9790 4950

TASMANIA

2 Esk Street
Invermay TAS 7248

T: (03) 6334 3744
F: (03) 6334 3959

NEW ZEALAND

Auckland
35-41 Walls Road
Penrose Auckland 1061

T: +64 9 579 2604
F: +64 9 525 1176

TOLL FREE: 0800 628 723

www.adradradiators.com.au